THOMSON MULTI MEDIA

TV

Brandt FERGUSON SABA TELEFUNKEN THOMSON

PARTS LIST
LISTE PIECES DETACHEES
ERSATZTEILLISTE
LISTA PARTI DI RICAMBIO
LISTA DE PIEZAS DE REPUESTO

THOMSON 29DF42ES Chassis ICC20

MODULES

PSB	**C20PB20 B*EW****0***	**10675390**
SSB	**C20SB20 B5**02R011**	**10695260**

GK101	TSOP1333	25358570
IB001	TDA6108JF	10616240
IF001	TDA8177F	10352880
IP020	VIPER20DIP	25408950
IP050	TEA2262	10495720
IP070	TLP621 GR(D4-LF2 T)	⚠ 20827900
IP170	LM393/NJM2903D	46069900
IP220	TDA8139	10044580
ZL221,251	MP125	⚠ 10469180
ZL231	MP40	⚠ 10469170
ZP009	MP315	⚠ 10575090

TB001,**TL**311	BF422	16003090
TF041,**TL**312, **TP**173,179	BC556B	16001020
TG001	BF199	16002950
TG002	BF370	25420830
TG006	BD140-16	25425020
TG007	BD139-16	16001760
TG011,**TL**003, **TP**026,080,115, 151,152,158, 160,161,184, 185,197,221	BC546B	45001866
TL004	MPSW01A	70436520
TL005	MPS750	16001340
TL010	ON4977/BU2525AX	10461310
TL029	STP10NB20FP	25414550
TP020	STH13NB60FI	25381050
TP057	BC337-40	45001466
TP150	STP22NE03L (TO220)	25341950

DB004	1N4004	44009009
DB006,030,031, 050,051,070, 071,**DL**043,305, **DP**023	BAV21	44044407
DF011	BZW04-58	10368210
DF031,033, **DL**302,303, **DP**061,220	RGP10G	10459090
DG001,002,003, 004,**DL**001,073, **DP**024,054,055, 057,064,069, 115,158,160, 161,170,183, 188,193,194, 196,197,221, 230	1N4148	44009209
DG026	BZX55C6V8	50890650
DL012	RGP15G	10272800
DL028,222,252	1N4001	16008160
DL029	RGP02-20	10472330
DL030	DTV32F-1500	10452490
DL032	STTA806DI	25422190
DL034,036	EGP10D	20953640
DL201,**DP**112	MUR1100E	10360280
DL221,251	FUF5402	10458530
DL231,**DP**020, 051,113	FUF4005/MUR160	16009580
DL301	BZX85C18	50890010
DP001,002,003, 004,006	GP30M	10455410
DP008	FUF5404	20150190
DP021	RGP10M	10455320
DP053	BZX55B15/7PD15 2%	80444020
DP110	BYT08PI-1000	25442210
DP120,140	S410D	10527250
DP130,135	MUR420	16009630
DP150	BYW29-150	16009140
DP152	ZPD10 2%	80444160
GE101	TLUV5300 LED	11137650

LL029	OST-WEST SPULE	10347650
LL034		10153270

PP180	1K0 OHM	70434550

RB001,004	1K5 OHM 5% 0,50W	10121880
RB031,051,071	560R0 OHM 10% 0,50W	10257590
RB032,052,072, **RE**102,**RP**181	100R0 OHM 5% 0,25W	30943330
RF003,006	1K3 OHM 1% 0,40W	15012810
RF008,011,012	1R5 OHM 1% 0,70W	10451140
RG026,027	3K3 OHM 5% 3W	30941170
RG030	22R0 OHM 5% 0,25W	⚠ 35031220
RK101	453R0 OHM 1% 0,250W	15018140
RK102	681R0 OHM 1% 0,25W	15020310
RK103	1K5 OHM 1% 0,25W	80437630
RK104	3K32 OHM 1% 0,25W	15017270
RL015	6R8 OHM 5% 0,25W	⚠ 41023309
RL021	1R82 OHM 1% 0,70W	10451420
RL022,**RP**228	1K0 OHM 1% 0,25W	15012570
RL023	3M9 OHM 2% 0,40W	13057750
RL024	100K0 OHM 1% 0,25W	15010160
RL027	2K2 OHM 5% 0,50W	⚠ 10239310
RL037	330R0 OHM 10% 0,50W	14050190
RL044	348K0 OHM 1% 0,25W	15016620
RL221,251	0R27 OHM 5% 2,50W	10263600
RL231	4R7 OHM 5% 2,5W	10471330
RL303	33K2 OHM 1% 0,25W	15016530
RL308	17K4 OHM 1% 0,25W	15012140
RL310	46K4 OHM 1% 0,70W	10403710
RL311	2K21 OHM 1% 0,25W	15015480
RP004	2R7 OHM 5% 4,50W	10379110
RP015	18R0 OHM 220V PTC	⚠ 41398800
RP020	100R0 OHM 5% 0,75W	⚠ 10230030
RP049	33R0 OHM 5% 2W	50888890
RP050	10M0 OHM 5% 0,70W	⚠ 20564520
RP051	100R0 OHM 5% 4,50W	10379830

R : RECYCLED PART
: PIECE RECYCLEE
: AUSTAUSCHTEILE
: RICAMBIO RICICLATO
: MODULO REPROCESADO

For any requests, please contact THOMSON multimedia after sales service area
Pour toutes précisions, contactez votre service apres vente local THOMSON multimedia
Für weitere Auskünfte, wenden Sie sich bitte an die THOMSON multimedia Kundendienste
Per precisazioni, contattare l'assistenza tecnica THOMSON multimedia
Para cualquier pregunta, por favor contactar con el responsable de zona del servicio postventa de THOMSON multimedia

07 / 2000 35125170
REV. N° 0 00 / 00 00000000

No copying, translation, modification on other use authorized. All rights reserved worldwide. • Tous droits de reproduction, de traduction, d'adaptation et d'exécution réservés pour tous les pays. • Sämtliche Urheberrechte an diesen Texten und Zeichnungen stehen uns zu. Nachdrucke, Vervielfältigungen - auch auszugsweise - nur mit unserer vorherigen Zustimmung zulässig. Alle Rechte vorbehalten. • I diritti di riproduzione, di traduzione, e esecuzione sono riservati per tutti i paesi. • Derechos de reproduccion, de traduccion, de adaptacion y de ejecucion reservados para todos los paises.

RP052	0R1 OHM 5% 2,50W	⚠	10288160
RP090	22K1 OHM 1% 0,25W		60442350
RP112	1K2 OHM 5% 2W		10134060
RP179	8K25 OHM 1% 0,25W		15021830
RP180	205K0 OHM 1% 0,40W		15013970
RP227	2K26 OHM 1% 0,25W		15015500

CB001	10N0F 3K0V		14036450
CB004,**CL**043	100N0F 20% 250V		13072860
CL028	100P0F 20% 1K0V		14035280
CL030	1N3F 2,5% 2K0V		10661380
CL031	11N6F 2,5% 2K0V		40406501
CL032	27N0F 5% 630V		10679680
CL034	680N0F 5% 250V		10139000
CL034	12N0F 2% 400V		10672180
CL035	460NF 5% 400V		10348250
CL038,039	27N0F 5% 250V		50895120
CL201,221,231, 251	330P0F 20% 1K0V		14035270
CL301	10N0F 5% 400V		10588870
CP001,002	100N0F 20% 275V	⚠	10331520
CP003,004,005	4N7F 1K0V		10058740
CP006	470N0F 10% 400V		10469630
CP007	560N0F 5% 250V		10376360
CP008,051,121, 131,136,141	470P0F 10% 2K0V		10099390
CP010	390U0F 20% 400V		25444380
CP015	68N0F 20% 250V		10256210
CP020,111	470P0F 10% 2K0V		25392030
CP021	1N0F 5% 400V		13055520
CP022	220P0F 10% 1K0V		25460410
CP049	1N5F 20% 400V	⚠	10442770
CP050	150P0F 20% 400V	⚠	20738090
CP052	2N2F 10% 1K0V		13090980
CP112	1N5F 10% 1K0V		43402900

LL001			10669660
LL008	DSTFBT 1372.0057	⚠	10679360
LL033			10347660
LL037		⚠	10518230
LP001		⚠	10203560
LP020	STAND-BY	⚠	25425970
LP050	SMT7LZ	⚠	10643540
LP070	DRIVER	⚠	60412091

OTHER PARTS
AUTRES PIECES
SONSTIGE TEILE
ALTRE PARTI
OTRAS PIEZAS

BB010	CATHODE RAY TUBE SOCKET SUPPORT TUBE CATHODIQUE BILDROEHRENFASSUNG SUPPORTO TUBO CATODICO SOPORTE T.R.C	⚠	80298800
BJ010	CINCH SOCKET PRISE CINCH CINCH-BUCHSE PRESA CINCH TOMA CINCH		10037440
BJ011	SVHS SOCKET PRISE SVHS S VHS BUCHSE PRESA SVHS TOMA SVHS		20392900
BL111,**BP**005	CABLE FLAT 21 PINS 70MM CABLE NAPPE 21 VOIES 70MM KABEL FLACH 21 PINS 70MM CAVO FALDO 21 SPINOTTI 70MM CABLE 21 11 PUNTOS 70MM		25413180
BQ012	JACK SOCKET PRISE JACK BUCHSE PRESA JACK TOMA JACK		10539510
CH200	ON/OFF SWITCH MSB2000 CONTACTEUR MARCHE/ARRET MSB2000 EIN-AUS SCHALTER MSB2000 CONTATTORE ACCESO/ SPENTO MSB2000 CONTACTOR MARCHA/PARADA MSB2000	⚠	10276500
CJ015	CABLE WITH CONNECTOR 9 PINS 380MM CABLE AVEC CONNECTEUR 9 VOIES 380MM KABEL MIT VERBINDER 9 PINS 380MM CAVO CON CONNETTORE 9 SPINOTTI 380MM CABLE CON CONECTOR 9 PUNTOS 380MM		10512510
CJ016	CABLE WITH CONNECTOR 3 PINS 220MM CABLE AVEC CONNECTEUR 3 VOIES 220MM KABEL MIT VERBINDER 3 PINS 220MM CAVO CON CONNETTORE 3 SPINOTTI 220MM CABLE CON CONECTOR 3 PUNTOS 220MM		25459200
CJ016	BSVM CABLE CPL CABLE BSVM EQUIPE BSVM KABEL KPL CAVO BSVM COMPLETO CAVO BSVM EQUIPADO		25448000
CJ020	CABLE WITH CONNECTOR 10 PINS 380MM CABLE AVEC CONNECTEUR 10 VOIES 380MM KABEL MIT VERBINDER 10 PINS 380MM CAVO CON CONNETTORE 10 SPINOTTI 380MM CABLE CON CONECTOR 10 PUNTOS 380MM		25434810
CJ030	CABLE WITH CONNECTOR 6 PINS 500MM CABLE AVEC CONNECTEUR 6 VOIES 500MM KABEL MIT VERBINDER 6 PINS 500MM CAVO CON CONNETTORE 6 SPINOTTI 500MM CABLE CON CONECTOR 6 PUNTOS 500MM		25460570
CJ035	CABLE WITH CONNECTOR 3 PINS 580MM CABLE AVEC CONNECTEUR 3 VOIES 580MM KABEL MIT VERBINDER 3 PINS 580MM CAVO CON CONNETTORE 3 SPINOTTI 580MM CABLE CON CONECTOR 3 PUNTOS 580MM		30020170
CJ050	CABLE WITH CONNECTOR 7 PINS 500MM CABLE AVEC CONNECTEUR 7 VOIES 500MM KABEL MIT VERBINDER 7 PINS 500MM CAVO CON CONNETTORE 7 SPINOTTI 500MM CABLE CON CONECTOR 7 PUNTOS 500MM		25018710
CJ075	CABLE WITH CONNECTOR 3 PINS 460MM CABLE AVEC CONNECTEUR 3 VOIES 460MM KABEL MIT VERBINDER 3 PINS 460MM CAVO CON CONNETTORE 3 SPINOTTI 460MM CABLE CON CONECTOR 3 PUNTOS 460MM		25443770
CJ076	CABLE WITH CONNECTOR 2 PINS 460MM CABLE AVEC CONNECTEUR 2 VOIES 460MM KABEL MIT VERBINDER 2 PINS 460MM CABLE CON CONNETTORE 2 SPINOTTI 460MM CABLE CON CONECTOR 2 PUNTOS 460MM		25443810
CJ080	CABLE WITH CONNECTOR 2 PINS 660MM RED CABLE AVEC CONNECT. 2 VOIES 660MM ROUGE KABEL MIT VERBINDER 2 PINS 660MM ROT CAVO CON CONNETTORE 2 SPINOTTI 660MM ROSSO CABLE CON CONECTOR 2 PUNTOS 660MM ROJO		10327670
CJ081	CABLE WITH CONNECTOR 2 PINS 500MM GREEN CABLE AVEC CONNECTEUR 2 VOIES 500MM VERT KABEL MIT VERBINDER 2 PINS 500MM GRUEN CAVO CON CONNETTORE 2 SPINOTTI 500MM VERDE CABLE CON CONECTOR 2 PUNTOS 500MM VERDE		10327410
CJ100	THT CABLE CABLE THT KABEL THT CAVO THT CABLE THT	⚠	10664300

CJ120	CABLE WITH CONNECTOR 2 PINS 500MM CABLE AVEC CONNECTEUR 2 VOIES 500MM KABEL MIT VERBINDER 2 PINS 500MM CAVO CON CONNETTORE 2 SPINOTTI 500MM CABLE CON CONECTOR 2 PUNTOS 500MM		25419710
FP001	2A5T TIME-LAG FUSE 2A5T FUSIBLE TEMPORISE 2A5T THERMISCHE SICHERUNG 2A5T FUSIBILE TEMPORIZZATO 2A5T FUSIBLE TEMPORIZADO	⚠	10246750
SK101,102,103,104	MICROSWITCH MICRO CONTACTEUR MIKROSCHALTER MICROINTERRUTTORE MICROCONTACTOR		30011100
SP015	RELAY 12V RELAIS 12V RELAIS 12V RELE 12V RELE 12V	⚠	90294100

EQUIPMENT/PRESENTATION
EQUIPEMENT/PRESENTATION
AUSSTATTUNG/GEHAEUSE
PARTI VARIE
EQUIPO/PRESENTACION

EXTENSION CABLE 21 PINS 350MM CABLE PROLONGATEUR 21 VOIES 350MM VERLAENGERUNGSKABEL 21 PINS 350MM CAVO DI PROLUNGA 21 SPINOTTI 350MM CABLE PROLONGADOR 21 PUNTOS 350MM		35120540
FRONT PANEL SI01TH FACADE SI01TH FRONTPLATTE SI01TH PANNELLO FRONTALE SI01TH PANEL FRONTAL SI01TH		25471020
REAR PANEL GY26TH DOS GY26TH RUECKWAND GY26TH PANNELLO POSTERIORE GY26TH TAPA POSTERIOR GY26TH	⚠	25459920
JACK PANEL GY20TH TABLEAU DE PRISES GY20TH JACK FRONTPLATTE GY20TH QUADRO DI PRESA JACK GY20TH TABLERO DE TOMA JACK GY20TH		25440650
LOUDSPEAKER GRID BOOMER GY26TH GRILLE HAUT PARLEUR GRAVES GY26TH LAUTSPRECHER GITTER TIEFTOENER GY26TH GRIGLIA ALTOPARLANTE SUPERIOR GY26TH REJILLA ALTAVOZ GRAVES GY26TH		25460050
FLAT RIGHT 100HZ GY26TH VOLET DROIT 100HZ GY26TH KLAPPE RECHTS 100HZ GY26TH SPORTELLO DESTRO 100HZ GY26TH TAPA DERECHA 100HZ GY26TH		25463250
FLAP LEFT GY26TH VOLET GAUCHE GY26TH KLAPPE LINKS GY26TH SPORTELLO SINISTRO GY26TH TAPA IZQUIERDO GY26TH		25435080
SPRING CATCH, PLASTIC LOQUETEAU PLASTIQUE DRUCKSCHNAEPPER CHIUSURA DI PLASTICA PESTILLO PLASTICO		65040100
LOGO THOMSON LOGO THOMSON SCHRIFTZUG THOMSON MARCHIO THOMSON LOGOTIPO THOMSON		25376750
CHASSIS SUPPORT SUPPORT CHASSIS CHASSIS HALTER SUPPORTO CHASSIS SOPORTE CHASSIS		25413970
CHASSIS SLIDE SECURING GLISSIERE FIXATION CHASSIS SCHIEBER BEFESTIGUNG CHASSIS SVIVOLO DI FISSAGGIO CHASSIS CORREDERA DE SUJECION CHASIS		25413960
LOUSPEAKER GUIDE CORNET ACOUSTIQUE FUEHRUNGSSCHIENE LAUTSPRECHER GUIDA ALTOPARLANTE GUIA ALTAVOZ		25464180
8R OHM 15W LOUDSPEAKER 60X125 8R OHM 15W HAUT PARLEUR 60X125 8R OHM 15W LAUTSPRECHER 60X125 8R OHM 15W ALTOPARLANTE 60X125 8R OHM 15W ALTAVOZ 60X125		10467060
8R OHM 15W LOUDSPEAKER 27X42 8R OHM 15W HAUT PARLEUR 27X42 8R OHM 15W LAUTSPRECHER 27X42 8R OHM 15W ALTOPARLANTE 27X42 8R OHM 15W ALTAVOZ 27X42		10317160
DUTTON ASSY ENSEMBLE DE TOUCHES TASTENEINHEIT ASSIEME TASTI CONJUNTO DE TECLAS		25393180
ON/OFF BUTTON TOUCHE MARCHE/ARRET EIN-AUS TASTE TASTO ACCESO/SPENTO TECLA MARCHA/PARADA		25415430
POWER SUPPLY LEAD CORDON D'ALIMENTZATION NETZKABEL CAVO DI ALIMENTAZIONE CABLE DE ALIMENTACION	⚠	25420360
CORD STOPPER ATTACHE CORDON SECTEUR ZUGENTLASTUNG BRIDA CORDONE DI ALIMENTAZIONE SUJECION CABLE DE ALIMENTACION		25071420
A68EJZ011X121 CATHODE RAY TUBE A68EJZ011X121 TUBE CATHODIQUE A68EJZ011X121 FARBBILDROEHRE A68EJZ011X121 TUBO CATODICO A68EJZ011X121 T.R.C	⚠	10676020
DEGAUSSING COIL 1077MM BOBINE DE DEMAGNETISATION 1077MM ENTMAGNETISIERUNGSSPULE 1077MM BOBINA DI SMAGNETIZZAZIONE 1077MM BOBINA DE DESIMANTACION 1077MM	⚠	10669710
RCT2100S REMOTE CONTROL RCT2100S TELECOMMANDE RCT2100S FERNBEDIENUNG RCT2100S TELECOMANDO RCT2100S TELEMANDO		21038350
FOLDING BOX EMBALLAGE CARTON KARTON IMBALLAGGIO CARTONE EMBALAJE CARTON		25418560
FITTING UPPER CALE SUPERIEURE POLSTER OBEN DISTANZIATORE SUPERIORE CALZO SUPERIOR		25414600
FITTING DOWNER CALE INFERIEURE POLSTER UNTEN DISTANZIATORE INFERIORE CALZO INFERIOR		25414590

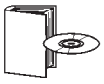

29DF42ES PARTS LIST 29DF42ES LISTE DE PIECES DETACHEES 29DF42ES ERSATZTEILLISTE 29DF42ES LISTA PARTI DI RICAMBIO 29DF42ES LISTA DE PIEZAS DE REPUESTO	35125170
ICC20 SERVICE MANUAL EUROPE ICC20 DOC TECHNIQUE EUROPE ICC20 TECHNISCHE DOKUMENTATION EUROPE ICC20 DOCUMENTAZIONE TECNICA EUROPE ICC20 DOCUMENTACION TECNICA EUROPE	35118540
29DF42ES UM THOMSON 15 LANGUAGES 29DF42ES NU THOMSON 15 LANGUAGES 29DF42ES BA THOMSON 15 LANGUAGES 29DF42ES IU THOMSON 15 LANGUAGES 29DF42ES IU THOMSON 15 LANGUAGES	25452220

The description and characteristics given here are of informative significance only, and non committal. To keep up the high quality of our products, we reserve the right to make any changes or improvement without previous notice. • Les descriptions et caractéristiques figurant sur ce document sont données à titre d'information et non d'engagement. En effet, soucieux de la qualité de nos produits, nous nous réservons le droit d'effectuer, sans préavis, toute modification ou amélioration. • Die Beschreibungen und Daten in dieser Anleitung dienen nur zur Information und sind nicht bindend. Um die Qualität unserer Produkte ständig zu verbessern, behalten wir uns das Recht auf Änderungen vor. • Le descrizioni e le caratteristiche date su questo documento sono fornite a semplice titolo informativo e senza impegno. Ci riserviamo il diritto di eseguire, senza preavviso, qualsiasi modifica o miglioramento. • Las descripciones y características que figuran en este documento se dan a título de información y no de compromiso. En efecto, en bien de la calidad de nuestros productos, nos reservamos el derecho de efectuar, sin previo aviso, cualquier modificación o mejora.

THOMSON multimedia S.A au capital de 932 655 840 € - 46, Quai Alphonse Le Gallo 92648 Boulogne Cedex FRANCE - RCS NANTERRE B 333 773 174

SERVICE POSITION - POSITION SERVICE - SERVICESTELLUNG - POSIZIONE SERVIZIO - POSICIÓN SERVICIO

A - CHASSIS - CHASIS

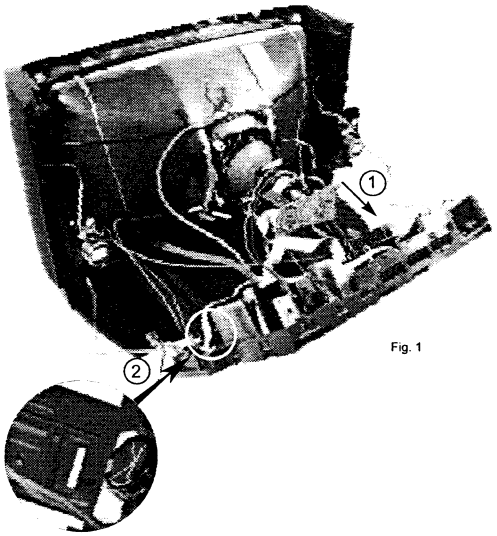

Fig. 1

1- Raise lightly the chassis, pull it (1) up to an intermediate position to get free.
2- Tip the chassis and insert the small tongue (2) in extremity of the maintain rail to fix the chassis in service position (Fig.1).

1- Soulever légèrement le chassis et le tirer (1) jusqu'à une position intermédiaire pour le dégager.
2- Basculer le chassis et engager les languettes (2) en extémité des réglettes de maintien pour fixer le chassis en position de service (Fig.1).

1- Heben Sie das Chassis leicht an und ziehen es nach hinten halb heraus. Heben Sie das Chassis aus den Führungsschienen.
2- Kippen Sie das Chassis und hängen es mit den Laschen (2) am Chassisrahmen in die sich am Ende der Führungsschienen befindlichen Ösen (Fig.1) ein.

1- Sollevare leggermente il telaio e tirarlo (1) fino ad una posizione intermedia per poterlo estrarre.
2- Inclinare e inserire le linguette (2) nelle apposite guide per mantenere il telaio fisso nella posizione service(Fig.1)

1- Alzar ligeramente el chasis, y dejarlo en una posición intermedia (1)
2- Bascular el chasis e insertar las lengüetas (2) en los extremos, para mantener el chasis fijo en la posición de servicio (Fig. 1).

B - POWER / SCAN BOARD - PLATINE ALIMENTATION / BALAYAGE - NETZTEIL- UND ABLENKPLATINE - PIASTRA DEFLESSIONE / ALIMENTAZIONE - PLACA ALIMENTACIÓN / BARRIDOS

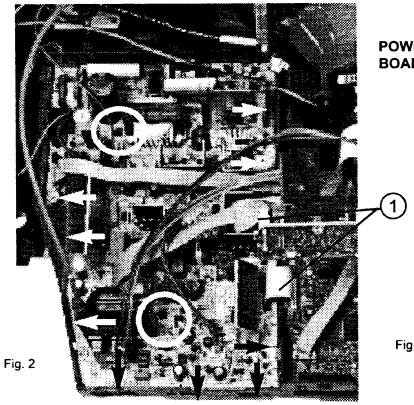

Fig. 2

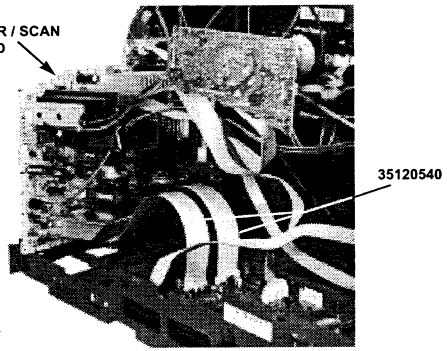

Fig. 3

1 - Remove the two connection cable PSB/SSB (1) (Fig.2) and get free the "PSB" board from the chassis in pressing the maintain tongue (9 in periphery and 2 in the board) (Fig.2) . Put the two extension cable PSB/SSB (35120540) (Fig.3).
2 - Put the PSB board in service position (Fig. 3)

1 - Retirer les cordons de raccordement PSB/SSB (1) (Fig.2) et dégager la platine "PSB" du chassis en appuyant sur les languettes de maintien (9 en périphérie et 2 en interne) (Fig.2) . Mettre les cordons prolongateurs de raccordement PSB/SSB (35120540) (Fig.3).
2 - Mettre la platine PSB en position de service (Fig. 3)

1 - Entfernen Sie die beiden Verbindungskabel PSB/SSB (1) (Fig.2). Zum Ausbau der PSB-Platine lösen Sie die 9 Halteklammern um die Platine herum und die 2 Klammern in der Platine wie (Fig.2) dargestellt. Stecken Sie die Verlängerungskabel PSB/SSB (35120540) (Fig.3) ein.
2 - Bringen Sie die PSB-Platine in die Service-Position (Fig. 3).

1 - Togliere idue cavi di collegamento PSB/SSB (1) (Fig.2) e liberare la piastra "PSB" dal telaio premendo le linguetto di fissaggio (9 periferiche e due interne) collegare le prolunghe PSB/SSB (35120540) (Fig.3).
2 - Sistemare la piastra PSB in posizione di service (Fig. 3).

1 – Retirar los dos cables de conexión PSB/SSB (1) (Fig.2) y soltar la placa "PSB" del chasis presionando las lengüetas (9 en la periferia y 2 en la placa) (Fig. 2). Enchufar los dos cables prolongadores PSB/SSB (35120540) (Fig.3).
2 – Poner la placa PSB en la posición de servicio (Fig. 3)

CONNECTING SAFETY POWER BOARD / SIGNAL BOARD
SECURITE DE CONNEXION PLATINES PUISSANCE / PETITS SIGNAUX
VERBINDER ZWISCHEN NETZTEIL/ABLENK-PLATINE UND SIGNAL-PLATINE
COLLEGAMENTI DI SICUREZZA DELLA PIASTRA POTENZA/PIASTRA SEGNALI
CONEXIONES DE LA SEGURIDAD ENTRE LA PLACA ALIMENTACIÓN / SEÑAL

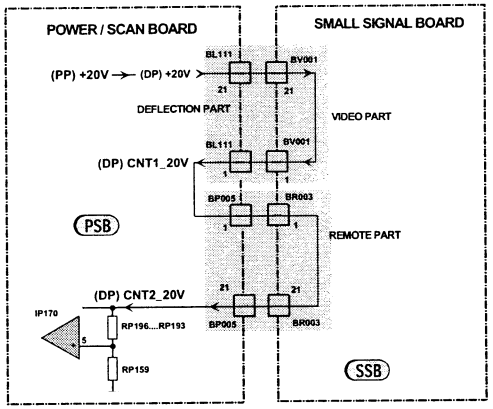

GB

The **20V** voltage which is fed in a loop **CNT1_20V** => **CNT2_20V** through the connectors going to the signal processing boarder in order to insure a good connection between both boards and to protect the **PSB** and the **SSB** boards :
CNT1_20V => safety of the sheet BL111 / BV001
CNT2_20V => safety of the sheet BP005 / BR003
If one of these voltage does not exist (20V comprise) the IP170 output will be 0 and the phototransistor IP070 is blocked and the set will be in standby.

F

Le cheminement de la tension **20V** par la platine petits signaux est effectué sous forme de boucle **CNT1_20V** => **CNT2_20V** afin de protéger les platines **PSB et SSB** en cas de mauvaise connexion des nappes BR003 et BV003.
CNT1_20V => sécurité de la nappe BL111 / BV001
CNT2_20V => sécurité de la nappe BP005 / BR003.
Si l'une de ces tensions (20V inclu) n'est pas présente la sortie de IP170 passe à 0 entraînant le blocage du photo-transistor IP070 et par suite le passage en standby.

D

Um die **PSB**- und die **SSB**-Platinen zu schützen und um eine sichere Betriebsspannungsversorgung dieser Platinen zu gewährleisten, ist die **+20V-Versorgungsschiene (CNT1_20V => CNT2_20V)** über die Verbinder BV001 und BR003 durchgeschleift.
CNT1_20V => Schutz über Flachbandkabel BL111 / BV001
CNT2_20V => Schutz über Flachbandkabel BP005 / BR003
Sollte eine dieser Betriebspannungen fehlen, wird der Ausgang des IC IP170 (Pin 7) 0V, der Fototransistor im Optokoppler IP070 sperrt und das Gerät schaltet in Standby.

I

L'alimentazione di **20V** alla piastra elaborazione segnali viene fornita dai connettori **CNT1_20V => CNT2_20V** in modo da assicurare une protezione delle piastre **PSB** e **SSB** nel caso che si manifesta se un cattivo collegamento.
CNT1_20V => protezione BL111 / BV001
CNT2_20V => protezione BP005 / BR003
Se una di queste tensioni 20V non fosse presente l'uscita di IP170 passa a 0V determinando il blocco del phototransistor IP070 e il successivo passaggio in standby.

E

El recorrido de la tensión de **20V** por la placa SSB se efectúa en forma de bucle **CNT1_20V => CNT2_20V** con el fin de proteger las placas **PSB** y **SSB** en el caso de un fallo de los conectores
CNT1_20V => seguridad del mazo BL111 / BV001
CNT2_20V => seguridad del mazo BP005 / BR003
Si una de estas tensiones faltan (incluidos los 20 V), la salida de IP70 será 0, el fototransistor IP070 se bloquea y el TV pasará a Standby (modo espera)

LOCATION OF CONTROLS / EMPLACEMENT DES REGLAGES / SERVICE LAGEPLAN / POSIZIONE REGULATORI DI SERVIZIO / SITUACIÓN DE LOS AJUSTES

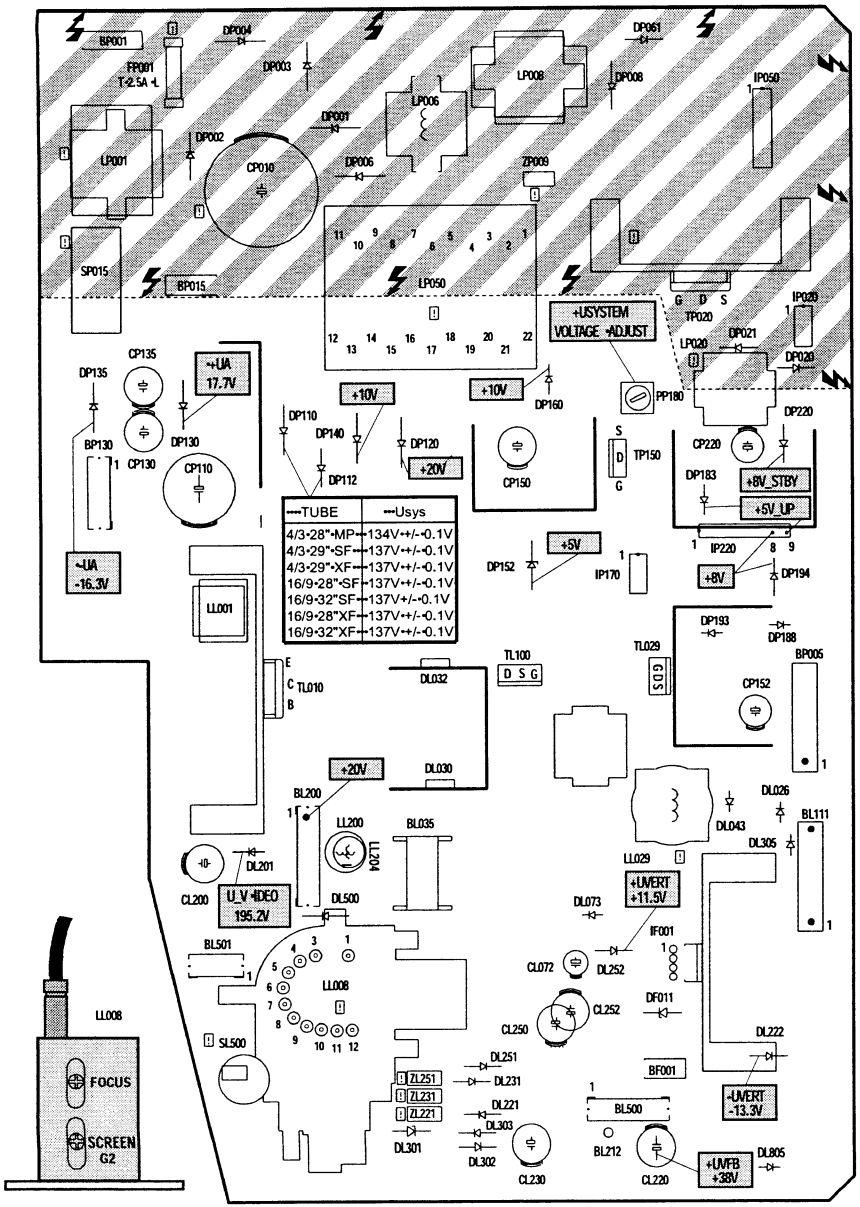

Part of board connected to mains supply.
Partie du châssis reliée au secteur.
Primärseite des Netzteils.
Parte dello châssis collegata alla rete.
Parte del chasis conectada a la red

Use isolating mains transformer.
Utiliser un transformateur isolateur du secteur.
Trenntrafo verwenden.
Utilizar un transformador aislador de red.
Utilizzare un transformatore per isolarvi dalla rete

ADJUSTMENTS / REGLAGES / EINSTELLUNGEN / REGOLAZIONE / AJUSTES

U-Sys	PP180	Standard TV settings: ☼ + ◑ + ◑ =50% TV to AV1: Black test pattern	V= DP110	TUBE NAME / DESCRIPTION / Usys jumper / Usys A66EHJ43X12 / 4/3-28"-MP / JP912 / 134V+/-0.1V A68EGD038X322 / 4/3-29"-SF / JP912 / 137V+/-0.1V A68EJZ011X121 / 4/3-29"-XF / JP912 / 137V+/-0.1V W66EGV023X522 / 16/9-28"-SF / JP912 / 137V+/-0.1V W76EGV023X522 / 16/9-32"SF / JP912 / 137V+/-0.1V W66EJY011X121 / 16/9-28"XF / JP912 / 137V+/-0.1V W76EJY011X121 / 16/9-32"XF / JP912 / 137V+/-0.1V
U-G2 SERVICE MODE	SERVICE MODE G2-potentiometer: SCREEN	-Select and enable the "G2-Alignment" item in VIDEO menu of the Service Mode: the displayed will change to a full black OSD screen. The following adjustment is best carried in semi-darkness: -Adjust the **SCREEN** potentiometer (LL008) so that the retrace lines are just visible. -Now carefully adjust the **SCREEN** potentiometer until the retrace lines just become invisible. -Press any RCU key to leave the G2 alignment. Note: If the G2 value is set too low, the chassis will display error code 26 (tube does not get warm in time). -Sélectionner et valider le réglage "G2-Alignment" dans le menu Vidéo de Service Mode: l'écran devient totalement noir. En obscurité: -Régler le potentiomètre **"SCREEN"** (LL008) pour apercevoir le retour des lignes. -Régler ensuite le potentiomètre **"SCREEN"** pour rendre juste invisible les lignes de retour. -Appuyer sur une des touches de la télécommande utilisateur pour sortir du mode G2-Alignment. Note: En cas de réglage G2 trop faible le chassis passe en code panne 26 (absence de l'information tube chaud. -Wählen Sie im Service-Mode im Menü VIDEO die Funktion "G2-Alignment" an: der Bildschirm wird schwarz. Die folgenden Einstellungen sollten in einem abgedunkelten Raum vorgenommen werden. -Stellen Sie den Einsteller **SCREEN** (am DST-LL008) so ein, dass Rücklaufstreifen sichtbar werden. -Stellen Sie den Einsteller SCREEN so ein, dass die Rücklaufstreifen gerade unsichtbar werden. -Drücken Sie irgendeine Taste auf der Fernbedienung um den G2-Abgleich zu verlassen. Achtung: Wenn die Schirmgitter-(G2-) Einstellung zu niedrig ist, kann der Fehlercode 26 (Bildrohr nicht rechtzeitig aufjeheizt) angezeigt werden. Selezionare e abilitare "G2-Alignment" interno al menu VIDEO del Service Mode: Verrà visualizzato uno schermo nero. In condizione con ambiente scuro. Regolare il potenziometro **SCREEN** (LL08) per rendere visibili le ritracce sullo schermo Regolare il potenziometro **SCREEN** per eliminare le ritracce sullo schermo Premere un tasto del tecomando per abbandonare G2 alignment. NOTA: se la regolazione della tensione G2 è troppo bassa il telaio visualizzerà il codice 26 (il tubo non raggiunge la temperatura nel tempo richiesto) -Seleccionar y validar la línea del "ajuste G2" en el menú VIDEO del Modo Servicio: La pantalla se pondrá oscura y el OSD pasará a color negro. Cuando esté oscura: -Ajustar el potenciómetro **SCREEN** (LL008) hasta hacer visibles las líneas de retrazado. -Ajustar el potenciómetro **SCREEN** justo, hasta hacer invisibles las líneas de retrazado. -Pulsar cualquier tecla del telemando para salir del ajuste de G2. Nota: Si el valor del ajuste de G2 es muy bajo, el chasis puede indicar el código de error 26 (TRC no se calienta en el tiempo establecido)		
FOCUS	FOCUS	Test pattern (standard values)		Sharp picture

SERVICE MODE (GB)

MODE SERVICE (F)

SERVICE MODE (D)

SERVICE MODE (I)

MODO SERVICIO (E)

1 ENTER/EXIT SERVICE MODE / ENTREE/SORTIE DU MODE SERVICE / EIN-AUSTIEG SERVICE MODE / ACCESSO/USCITA ALLA/DALLA FUNZIONE / ENTRADA/SALIDA MODO SERVICIO

1 ACCESSING SERVICE MODE

TV Control Panel Access

- Switch the TV into "**Standby**" mode by pressing the Standby button on the RCU. Wait till the TV goes into the standby.
- Press the **VOL-** button and then the **PR-** button on the TV keyboard. Hold them down for more than 6 seconds.
- After the normal switch on time, when the 6 seconds have elapsed, the main service menu appears on the screen.

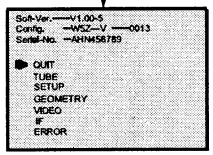

Note :

In service mode :
- *The child lock function is re-initialized*
- *Clear any wake-up/sleep timers*
- *Pin 8 of the scart plug has to be ignored.*
- *AV- Link WSS detection and letterbox detection (autoformat) have to be disabled.*
- *Automatic standby functions, in case of no antenna signal have to be disabled.*
- *Sharpness : middle (nominal)*
- *Install Mode disabled.*
- *Default format and zoom.*
- *The Chassis Variant will be checked and stored.*

Accès avec le clavier du téléviseur

- Mettre le téléviseur en position "**veille**" avec la télécommande utilisateur.
- Appuyer sur la touche **VOL-** puis sur la touche **PR-** du clavier du téléviseur.
  Maintenir enfoncées ces touches ensemble plus de 6 secondes.
- Après le temps normal de mise en fonctionnement et lorsque les 6 secondes sont écoulées, le menu principal du Mode Service apparaît.

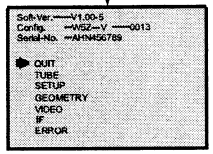

Note :

En mode service:
- *Le verrouillage parental est effacé (réinitialisé).*
- *La programmation des heures "reveil/matin" est annulée.*
- *Pin 8 de la prise SCART ignorée.*
- *AV- Link , la détection WSS et la détection letterbox ne sont pas validées.*
- *La fonction de veille automatique en cas d'absence de signal d'antenne n'est pas validée.*
- *Le contour est appelé à sa valeur moyenne.*
- *Le mode d'installation n'est pas pas valide.*
- *Zoom et format ignorés.*
- *Le type de chassis est contrôlé et mémorisé.*

Zugriff über die Tastatur des Fernsehgeräts

- Schalten Sie das Gerät mit der Fernbedienung in **Standby.**
- Drücken Sie die **VOL-** Taste und dann die **PR-** Taste am Nahbedienteil des Gerätes. Halten Sie beide Tasten für länger als 6 Sekunden gedrückt.
- Nach der normalen Einschaltzeit erscheint auf dem Bildschirm das Menü des Service-Modes.

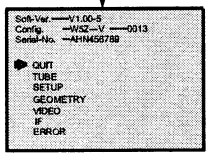

Anmerkung :

Im SERVICE MODE :
- *wird die Kindersicherung gelöscht.*
- *werden alle Ein- und Ausschaltzeitgeber gelöscht.*
- *wird die SCART - Schaltspannung nicht ausgewertet.*
- *AV- Link WSS Detektion and Letterbox Detektion (Autoformat) sind abgeschaltet.*
- *wird die Automatische Abschaltung bei fehlendem Antennensignal gesperrt.*
- *wird die Bildschärfe auf Mittelstellung (nominal) gesetzt.*
- *wird der Installations-Modus gesperrt.*
- *wird das Standardformat bzw. der Standard-Zoom-modus gewählt.*
- *die Chassis-Variante wird überprüft und gespeichert.*

tramite i comandi del televisore

- Posizionare il TV nel modo "**Standby**" usando il tasto standby del telecomando. Attendere che il TV si posizioni in standby.
- Premere prima il tasto **VOL-** e poi il tasto **PR-** sulla tastiera del TV. Mantenere premuto due tasti per più di 6 secondi.
- Dopo circa 6 secondi il TV si accenderà mostrando sullo schermo il menu service.

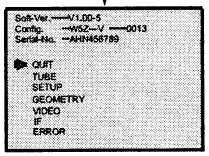

Nota :

Nel service mode:
- *La funzione Blocco Bambini è reinizializzata.*
- *La programmazione sveglia è cancellata.*
- *Il piedino 8 della scart è ignorato.*
- *La rilevazione AV-Link WSS e rilevazione letterbox (formato) è stata disabilitata.*
- *Funzione automatica di standby, nel caso di mancanza del segnale d'antenna è disabilitata.*
- *Nitidezza: media (nominale)*
- *Il Modo Install disabilitato.*
- *Formato ignorati e zoom.*
- *Le varianti del telaio verranno controllate e memorizzate.*

Acceso panel control TV

- Con el TV encendido, apagarlo con la tecla "**Standby**" del telemando. Asegurarse de que el aparato ha pasado a "Standby".
- Pulsar primero, la tecla VOL- y después PR- del teclado del TV. Mantenerlas pulsadas al mismo tiempo durante unos 8 segundos
- Después del arranque normal, cuando hayan pasado los 6 segundos. aparecerá el menú principal del Modo Servicio

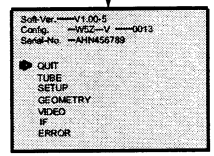

Nota :

En modo servicio:
- *La función "Bloqueo niños" es reinicializada.*
- *Anula todos las horas programadas*
- *La patilla 8 del SCART es ignorada*
- *La detección de AV- Link, WSS y "modo buzón" (autoformato) se desactiva.*
- *El apagado automático en caso de ausencia de señal de antena es desactivado.*
- *la nitidez es puesta al punto medio.*
- *El Modo Instalación es desactivado.*
- *Zoom y formato ignorados.*
- *El tipo de chasis será comprobado y memorizado.*

2 TEMPORARY EXIT FROM SERVICE MODE / SORTIE TEMPORAIRE DU MODE SERVICE / VORÜBERGEHENDES VERLASSEN DES SERVICE MODE / USCITA TEMPORANEA DAL SERVICE MODE / SALIDA TEMPORAL DEL MODO SERVICIO

- Press Exit on the Remote control.
- Everyday use menu can be accessed via Menu button. (Text and EPG not available)
- Field Service Menu can be re-entered via Blue button.

- Utiliser la touche Exit de la télécommande.
- Le menu utilisateur peut être accessible via la touche "Menu". (Télétexte et EPG non valides).
- Pour entrer à nouveau dans le mode service utiliser la touche bleue.

- Auf der Fernbedienung EXIT drücken.
- Mit der Taste Menü gelangen Sie zum Menü "Übersicht". (Videotext und EPG sind nicht verfügbar).
- Mit der blauen Taste gelangen sie zurück in den Service-Mode.

- Premere Exit sul telecomando.
- Al menu di uso quotidiano si accede attraverso il pulsante Menu. (Text and EPG disabilitati).
- È possibile rientrare nel Menu Service tramite il pulsante Blue.

- Pulse Salir en el mando a distancia
- Con el botón Menu puede acceder al menú de uso cotidiano. (Teletexto y EPG no disponibles).
- Puede entrar al Menú Servicio con el botón azul.

3 EXITING FROM SERVICE MODE / SORTIE DEFINITIVE DU MODE SERVICE / ENDGÜLTIGES VERLASSEN DES SERVICE MODES / USCIRE DAL SERVICE MODE / SALIDA DEL MODO SERVICIO

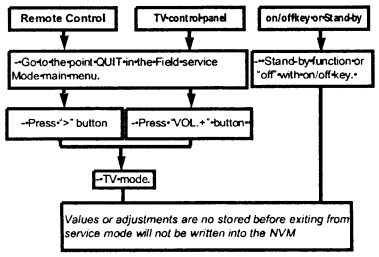

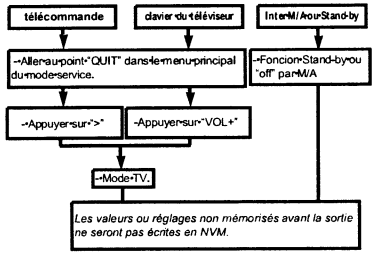

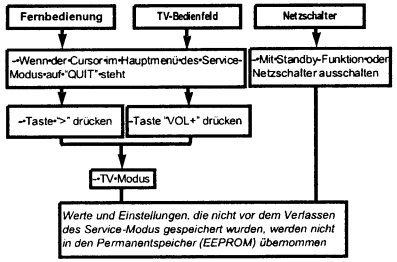

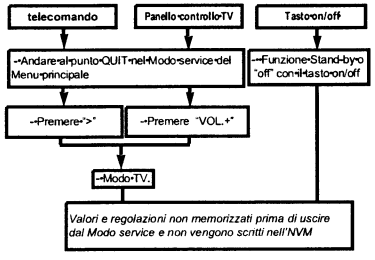

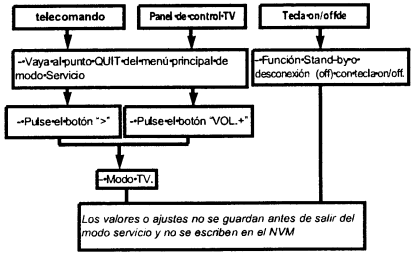

MODO SERVICIO (E)

O SERVICIO

1 ACCESO AL MODO SERVICIO

Acceso panel control TV

Con el TV encendido, apagarlo con la tecla "Standby" del telemando.
Asegurarse de que el aparato ha pasado a "Standby".
Pulsar primero, la tecla VOL- y después PR- del teclado del TV.
Mantenerlas pulsadas al mismo tiempo durante unos 8 segundos
Después del arranque normal, cuando hayan pasado los 8 segundos, aparecerá el menú principal del Modo Servicio

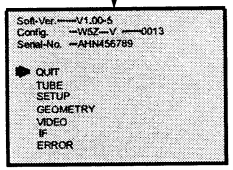

Nota :

En modo servicio:
- La función "Bloqueo niños" es reinicializada.
- Anula todos las horas programadas
- La patilla 8 del SCART es ignorada
- La detección de AV- Link, WSS y "modo buzón" (autoformato) se desactiva.
- El apagado automático en caso de ausencia de señal de antena es desactivado.
- la nitidez es puesta al punto medio.
- El Modo Instalación es desactivado.
- Zoom y formato ignorados.
- El tipo de chasis será comprobado y memorizado.

2 SALIDA TEMPORAL DEL MODO SERVICIO

Pulse Salir en el mando a distancia
Con el botón Menu puede acceder al menú de uso cotidiano. (Teletexto y EPG no disponibles).

Puede entrar al Menú Servicio con el botón azul.

3 SALIDA DEL MODO SERVICIO

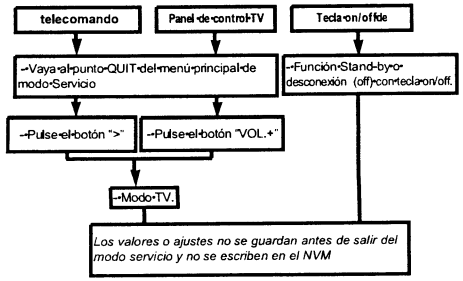

II NAVIGATION INSIDE THE SERVICE MODE ~ DEPLACEMENT DANS LE MODE SERVICE
SUCHE IN SERVICE MODE ~ OPZIONI NEL SERVICE MODE ~ BUSQUEDA EN MODO SERVICIO

1 REMOTE CONTROL ~ TELECOMMANDE ~ FERNBEDIENUNG TELECOMANDO ~ MANDO A DISTANCIA

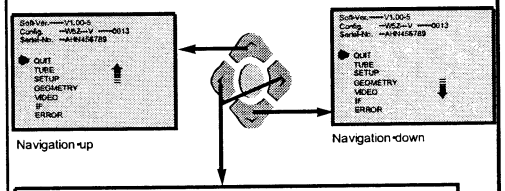

Select option
Option anwählen
Selezionare l'opzione
Seleccionar opción

"Change" value
Wert "ändern"
"Cambiare" valore
"Cambiar" valor

> VALUE
< VALUE

2 TV CONTROL PANEL ~ CLAVIER TV ~ TASTATUR DES FERNSEHGERÄTS ~ COMANDI DEL TELEVISORE

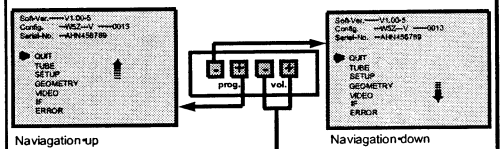

Select option
Option anwählen
Selezionare l'opzione
Seleccionar opción

"Change" value
Wert "ändern"
"Cambiare" valore
"Cambiar" valor

Vol. + VALUE
Vol. - VALUE

3 DISPLAYING THE VALUE OF THE SETTING ~ AFFICHAGE DES VALEURS ~ ANZEIGE DES EINSTELLUNGSWERTES VISUALIZZAZIONE DEL VALORE DELLA REGOLAZIONE ~ VISUALIZACION DEL VALOR DE AJUSTE

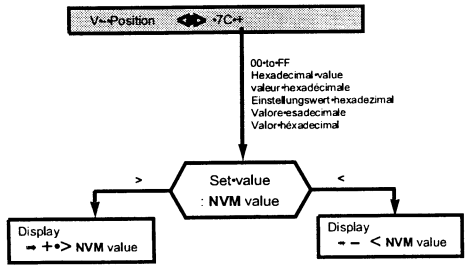

4 TOGGLE FUNCTIONS ~ VALIDATION DES FONCTIONS EIN UND AUSSCHALT FUNKTIONEN ~ FUNZIONI DI COMMUTAZIONE ~ FUNCION CONMUTACION

To enable a function check (tick) ☒ the box.
Pour valider une fonction cocher ☒ la case correspondante
Zum Implementieren einer Funktion das Kontrollkästchen ☒ aktivieren (ankreuzen)
Per implementare una funzione di verifica, (vistare) ☒ la casella
Para poner en fucionamiento una función verifique (señale) ☒ la casilla

☒ : Implemented function ☐ : No implemented function

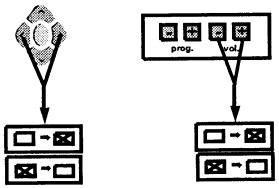

5 STORING VALUES IN MEMORY ~ MEMORISATION DES VALEURS ~ SPEICHERN DER WERTE ~ MEMORIZZAZE21 VALORI ~ VALORES ALMACENADOS EN LA MEMORIA

After setting, the values are stored in NVM.
Après réglages les valeurs sont mémorisées en NVM.
Nach dem Einstellen werden die Werte im NVM gespeichert.
Dopo la regolazione I valori vengono memorizzati in NVM.
Después del ajuste, los valores son almacenados en NVM

The box ☐ becomes ☒
During alignment, values are temporarily stored in RAM.
En cours d'alignement les valeurs sont mémorisées temporairement en RAM
Während des Abgleichs werden die Werte vorübergehend im RAM gespeichert
Durante l'allineamento i valori vengono memorizzati provvisoriamente sulla RAM
Durante el alineamento los valores son almacenados temporalmente en RAM

Store ➡ Copies RAM values into NVM
Copie la valeur RAM en NVM
Kopieren des Wertes von RAM nach NVM
Copiare i valori RAM in NVM
Copiar valores RAM en NVM

Restore ➡ Copies all values from NVM into RAM.
Copie toutes les valeurs des données NVM en RAM
Kopiert alle NVM-Datenwerte in des RAM
Copiare tutti i valori da NVM sulla RAM
Copia todos los valores de NVM a RAM

Default ➡ All the default values of a page in use are stored in RAM.
L'ensemble des valeurs par défaut d'une page courante est chargé en RAM.
Sämtliche Standardwerte der aktuellen Seite werden ins RAM geladen
Tutti i valori di default di una pagina in uso vengono memorizzati sulla RAM
Todos los valores por defecto de la página en curso están almacenados en RAM.

III LITE MENU FOR FIELD SERVICE MODE ~
MENUS DU MODE SERVICE

1 MAIN MENU ~ MENU PRINCIPAL

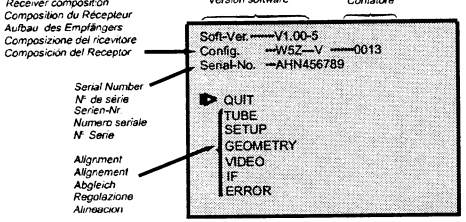

TV CONFIGURATION ~ CONFIGURATION DU TV ~ GERÄTEKONFIGURATION ~ CONFIGURAZIONE DEL TV ~ CONFIGURACIÓN Y TV

Config. W5Z....V

Character 1 : Tube type : "A"=4/3, "W" =16/9
Character 2 : Teletext external memory detected :
"T"=128 page, "-"=not (only internal memory)
Character 3 : Ambiant Sensor : "S"=detected, "-"=not (not ambiant sensor on ICC20 step 1)
Character 4 : Chassis variant : "N"=Nicam, "V"=Virtual Dolby, "D"=Dolby prologic
Character 5 : Noise Reduction upconversion memory detected : "N"=detected "-"=not
Character 6 : not used /spare
Character 7 : not used /spare

SERIAL-N° A15...

Character 1 : Factory, A=Angers, B=Tarancon, Z=Zyrardow
Character 2 : Year : H=1996, J=1997 etc. (International code UTEC90511)
Character 3 : Month, from 1=January to 9=September, O=October, N=November D=December.
Character 4-9 : Serial N°.

TIME COUNTER ~ COMPTEUR DE TEMPS ~ ZÄHLER ~ CONTATORE ~ CONTADOR

The counter indicates the TV's number of service hours. It counts from to 0 to 65535 hours.
The display is hexadecimal.
Le compteur de temps indique le nombre d'heures de service du TV. Il compte de 0 à 65535 heures. L'affichage est en hexadécimal.
Der Zähler zeigt an, wieviele Stunden der Fernseher in Betrieb ist. Die Anzeige ist hexadezimal.
Il contatore indica il numero di ore di servizio del TV. Puo' contare da 0 a 65535. La visualizzazione è esadecimale.
El contador indica el número de horas de servicio de la TV. Cuenta de 0 a 65535 horas. El visualizador es hexadecimal.

2 SUBMENU ~ SOUS-MENU

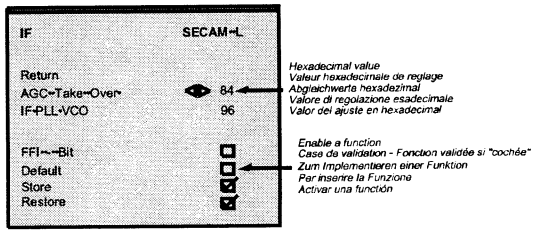

ALIGNMENT PROCEDURE - PROCESSUS DE REGLAGES - ABGLEICH - VISUALIZZAZIONE DEL VALORE DELLA REGOLAZIONE - PROCEDIMIENTO DE ALINEACION

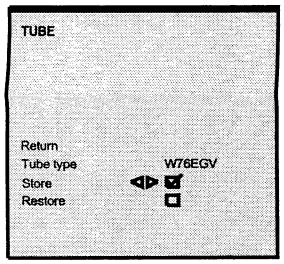

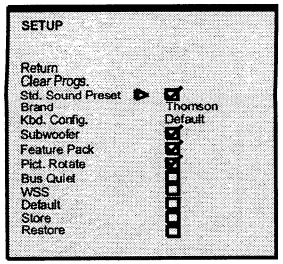

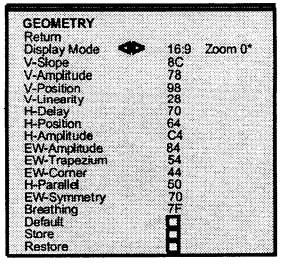

* Test Bar pattern used : 4/3 with a geometric circle. Complete geometry Adjustment is done according to chassis tube format : **4/3-zoom-0** mode for **4/3** tubes, **16/9-zoom-0** mode for **16/9-tubes** : see annexed .

*Mire de barre utilisée : 4/3 avec cercle de géométrie. les réglages complets de géométrie sont faits dans le format du tube équipant l'appareil : mode **4/3-zoom-0** pour les tubes **4/3**, **16/9-zoom-0** pour les appareils équipés de **tubes 16/9**. voir ci-après*

*Verwendetes Testbild : 4/3 mit geometrischem Kreis. Ein vollständiger Geometrie-Abgleich ist nur notwendig bei **4/3-Röhren** Zoomstufe **4/3-Zoom-0** und **16/9-Röhren** Zoomstufe **16/9-Zoom-0** : siehe unten.*

*Formato Testo utilizzato: 4/3 con cerchio geometrico. La regolazione viene effettuata nel formato del telaio del cinescopio **4/3-zoom-0** tubo **4/3**, **16/9-zoom-0**. tubo **16/9**. see annexed*

*Carta de ajuste utilizada : 4/3 con círculo geométrico. El ajuste completo de la geometría hay que hacerlo de acuerdo con el tipo de chasis y el formato del tubo . Modo **4/3-zoom-0** para tubos de **4/3**; modo **16/9 zoom-0** para tubos de **16/9**. See annexed*

TUBE

Return

Closes the sub-menu and returns to the "Main Service Menu"

Retourne au menu principal.

Schließt das Untermenü, und das Haupt-Menü des Service-Modus erscheint.

Chiude il sottomenu e fa apparire il menu principale Service Mode.

Cierra el submenú. El menú Field Service Mode aparece.

Press </>: remote control; Vol. +/- : TV keyb.

Tube type

After replacing the NVM, the correct tube type number must be entered (6 characters). Once entered, the tubes geometry and video default values are immediately activated. Variable geometry and video parameters are written to the NVM when the "STORE" line is selected. See below the tube type number list.

Definir le tube exact après changement de NVM.
Les nouvelles valeurs de tubes (avec video et géometrie) sont actives de suite.
Les paramètres de vidéo et de géométrie sont chargés en NVM lorsque STORE est sélectionné. Voir liste ci-dessous.

Nach dem Tausch des NVM (EEPROM) muß der richtige Bildrohrtyp eingegeben werden. Es werden dann sofort die entsprechenden Geometrie-und Video-Defaultwerte aktiviert. Variable Geometrie-und Videowerte müssen mit "STORE" in das NVM geschrieben werden. Liste der Röhren: siehe unten.

Definire il tubo appropriato dopo aver cambiato la NVM; I valori per il nuovo tipo di tubo (con video e geometria) sono immediatamente attivi. I parametri per video e geometria variabili vengono immessi nella NVM quando viene selezionata la funzione Store. Si veda la lista dei tubi riportata sotto.

Definir el tubo correcto después de haber cambiado el NVM.Los nuevos valores de tipo de tubo (con la video y la geometria por defecto) se activan inmediatamente.
Los parámetros variables de geometría y vídeo se graban en el NVM al seleccionar la función Store.Vea más abajo la lista de tubos.

TUBE NAME	LIST	DESCRIPTION
A66EHJ43X12	A66EHJ	4/3 28" MP(1)
A68EGD038X322	A68EGD	4/3 29" SF(2)
A68EJZ011X121	A68EJZ	4/3 29" XF(2)
A68LPQ356X99	A68LPQ	4/3 29" XF (3)
A80EJA16X120	A80EJA	4/3 33" MP(2)
A90AFX14X12	A90AFX	4/3 37" MP(2)
W66EGV023X522	W66EGV	16/9 28" SF(2)
W66LPQ356X99	W66LPQ	16/9 28" SF(3)
W66EJY011X121	W66EJY	16/9 28" XF(2)
W76EGV023X522	W76EGV	16/9 32"SF(1)
W76EJY011X121	W76EJY	16/9 32"XF(2)
W76LPF350X99	W76LPF	16/9 32"SF(4)

(1) : AK, Coty-M
(2) : Invar vector gun, BSVM, Extra Flat
(3) : Invar, DF-II gun, BSVM,NS, Extra Flat
(4) : Invar, DF-III gun, BSVM,NS

→ After setting → Store (+)

SETUP

Return

Closes the sub-menu and returns to the "Main Service Menu"

Retourne au menu principal.

Schließt das Untermenü, und das Haupt-Menü des Service-Modus erscheint.

Chiude il sottomenu e fa apparire il menu principale Service Mode.

Cierra el submenú. El menú Field Service Mode aparece.

Press </>: remote control; Vol. +/- : TV keyb.

Clear Prog.

Clears all programms stored in memory and resets all Picture and Sound settings to the factory defaults. The AUTO INSTALL (out of factory) mode can be initialised by a long press (>2.5s.) of the selection button.

Efface tous les programmes mémorisés.
Valeurs SON et IMAGES: valeurs usines.
Fonction valide par une longue pression (>2.5s.) sur la touche de sélection </>.

Löscht alle Programmplätze und setzt alle Bild- und Toneinstellungen auf Fabrikwerte zurück. Der AUTO-INSTALL-Modus kann durch einen langen Knopfdruck (>2,5s) initialisiert werden.

Clear Prog.
Cancella tutti i programmi in memoria e regola i Valori analogici SUONO IMMAGINE ai livelli di fabbrica. Riportare la TV al modo Selezione pressione prolungata >2,5 sec. su il pulsante </>.

Programa de borrado.
Borra todos los programas almacenados en la memoria. Valores analógicos de IMAGEN y SONIDO: valores de fábrica. Regresa la TV para "salir del modo fábrica". Selección: Presión larga igual a 2,5 s.

Std.Sound Preset

Sets the default value for the Standard Sound Preset.

Factory adjusted
Reserve au reglage usine
Reserviert für Fabrikeinstellungen
Riservato alla regolazione di fabbrica
Ajuste reservado fábricas

Brand

Set the "Brand": Thomson, Telefunken, Other
Factory adjusted
Réservé au réglage usine
Reserviert für Fabrikeinstellungen
Riservato alla regolazione di fabbrica
Ajuste reservado fábricas

Kbd. Config.

Factory adjusted
Réservé au réglage usine
Reserviert für Fabrikeinstellungen
Riservato alla regolazione di fabbrica
Ajuste reservado fábricas

Subwoofer

Enable the subwoofer on equiped set.

Validation du Subwoofer sur les appareils équipés .

Einschalten des Subwoofers (wenn vorhanden).

Abilita il subwoofer negli apparecchi equipaggiati.

Validaciónde que existe el subwoofer.

☑ Subwoofer enable ☐ Subwoofer disable

SETUP

Feature Pack

Enables or disables the option to decode and display EPG program data, the Graphic Equalizer, Picture Presets and Sound Presets features (in user menu).

Validation ou inhibition du décodage/affichage des données du programme EPG, de l'équalizer graphique, des pré-réglages son et image dans le menu utilisateur.

Ein- und Abschalten der Optionen Decodierung und Anzeige der EPG Programmdaten, Grafischer Equalizer, Bildvoreinstellungen und Tonvoreinstellungen (in den Benutzermenus).

Abilita l'EPG, l'equalizzatore grafico, Ipreset Video e preset suono
(in menu suono)

Valida las funciones EPG, Ecualizador gráfico y predeterminados para imagen y sonido (en el menú "Ajustes personales")

☑ Enable ☐ Disable

Picture Rot

Enables the "Earth Field Correction" function (EFC) on ICC20 16/9 and some large screen 4/3 by adding a special bargraph in the "personal settings" menu (user menus). If is necessary to validate this function if the EFC correction circuit is inserted.

Valide la fonction "correction de champ magnétique terrestre" (EFC) sur les chassis ICC20 16/9 et les appareils 4/3 grand écran par addition d'un bargraphe spécifique dans le menu "réglages personnels" (menu utilisateur). Cette fonction doit être validée lorsque les circuits de correction "EFC" sont insérés.

Freigabe der Erdfeldkorrektur (EFC) bei ICC20 16/9 und einigen 4/3 Geräten. Im Menü "Eigene Einstellungen" (Menü "Installation") wird ein zusätzlicher Anzeigebalken eingeblendet Nach dem Einbau des EFC-Moduls ist diese Funktiozu aktivieren.

Attiva la funzione "Correzione del campo magnetico terrestre" (EFC) su telaio ICC20 16/9 e alcuni grandi schermi 4/3 , aggiungendo una speciale barra grafica nei menu di "Menu Principale" . Se il circuito di correzione è montato, è necessario convalidare questa funzione.

Valida la función "corrección del campo magnético terrestre" (EFC) en los chasis ICC20 and some large screen 4/3 añadiendo una barra gráfica en el menú "Ajustes personales". Es necesario validar ésta función si el circuito de corrección EFC está montado.

☑ Rotation bargraph available menu, EFC function active.

☐ Rotation bargraph suppressed from personal settings, EFC circuit disactivated

WSS

Automatic detection of DOLBY surround sound and 16/9 format pictures via Teletext line number 23 is valid on all programmes.

Détection automatique du son surround DOLBY et du format 16/9 via la ligne 23 du Teletxte. Valide pour tous programmes.

WSS (nur bei 16:9 oder Dolby)
Auswertung der Zeile 23 zur automatischen Format-und Dolbyumschaltung.

Identificazione "auto-Dolby" e "format 16/9" via televideo alla riga 23.La sélezione di WSS Processing valè per tutti i programmi.

Detección "auto-surround" y "format" a través de la línea 23 de Teletext.La selección del procesamiento WSS es válida para todos los programas.

☑ Detection enable ☐ Detection disable

→ After setting → Store (+)

SETUP

Bus Quiet

In "Bus Quiet", the NVM can be read, modified and reprogrammed by means of a NVM Programmer.
To access "Bus Quiet" : Long press ">".
The TV should remain in "Bus Quiet" mode until either Exit, Left, Right, Up,Down or Standby keys on the RCU or local keyboard are pressed; at which point the TV should carry out a warmstart in order to prevent differences between the NVM and RAM contents.
After returning from Bus Quiet, the software checks the NVM content.
If it is not valid, the software perform a new default writing of the NVM content.

En mode bus quiet la NVM peut être lue, modifiée et reprogrammée.
Accès au mode Bus quiet :
Longue pression ">".
Utiliser l'une des touches Exit, Gauche, Droite Haut, Bas, standby ou une des touches du clavier pour sortir le téléviseur du mode bus quiet.
A partir de ce point de sortie le démarrage du téléviseur s'effectue à chaud pour éviter toute différence des contenus RAM et NVM.
En sortie de mode bus quiet, le logiciel contrôle le contenu de la NVM.
S'il n'est pas correct le logiciel exécute une nouvelle écriture par défaut de celle-ci.

Im "Bus Quiet"-Modus kann der Inhalt des NVM mittels eines externen NVM-Programmiergerätes ausgelesen, geändert oder neu programmiert werden. "Bus Quiet" wird einem längeren Druck auf ">" aktiviert. Das Gerät bleibt solange im "Bus Quiet" - Mode, bis durch Druck auf die EXIT-, LINKS-, RECHTS-, HOCH-, RUNTER- oder STANDBY-Taste (am Gerät oder auf der Fernbedienung) ein Warmstart des Gerätes veranlaßt wird, um unterschiedliche Daten in RAM und NVM zu vermeiden.
Es folgt ein Software-Check des NVM-Inhaltes.
Sollte dieser nicht gültig sein, wird der Inhalt mit Default-Werten überschrieben.

In Modo Bus Quiet, la memoria NVM può essere letta, modificata o riprogrammata.
Per accedere al modo Bus Quiet premere a lungo il tasto ">".
Il TV rimane in modo Bus Quiet fino a che vengono premuti i tasti Exit, o Destro Sinistro, Su o Giù o Standby dal telecomando o dalla tastiera locale; a questo punto il TV riparte per evitare interferenze tra i contenuti della memoria NVM e della RAM.
All'uscita dal modo Bus Quiet, il software controlla il contenuto della memoria NVM. Se tale contenuto non è valido, il software provvede a una nuova programmazione della NVM con l'inserimento dei dati di default.

En bus quieto, la NVM puede ser leída, modificada y reprogramada.
Acceso a bus quieto : Larga presión en ">"
El TV permanecerá en bus quieto hasta que se pulse cualquiera de las teclas siguientes: Exit, "<", ">", "^", "v", ">"o Standby del telemando o del teclado.
En este momento el TV arrancará para evitar cualquier diferencia entre los contenidos de la RAM y NVM.
Al salir del modo bus quieto, el software comprueba el contenido de la NVM.
Si no coincide, el software ejecuta la escritura de los datos en la NVM.

☑ Bus quiet enable ☐ Bus quiet disable

→ After setting → Store (+)

GEOMETRY

Return

Closes the sub-menu and returns to the "Main Service Menu"

Retourne au menu principal.

Schließt das Untermenü, und das Haupt-Menü des Service-Modes erscheint.

Chiude il sottomenu e fa apparire il menu principale Service Mode.

Cierra el submenú. El menú Field Service Mode aparece.

Press </>: remote control; Vol. +/- : TV keyb.

Display Mode

Complete geometry adjustment is done according to chassis tube format :
4/3-zoom-0 mode for **4/3-tubes**, **16/9-zoom-0** mode for **16/9-tubes**.
In all other modes it is only necessary to adjust some few registers.
The actual format mode has to be displayed in the Geometry Service mode.
It has to be possible to change the format during the geometry alignment without leaving the Service mode.

The available display modes depend on the picture tube format.
4/3 tube : 2 modes 4/3 and 16/9
16/9 tube : 3 modes 16/9 standard, 4/3 Zoom 0, Cinerama

The menu shows only the registers which have to be aligned for the actual picture format currently displayed.

Les réglages complets de géométrie sont faits dans le format du tube équipant l'appareil.
Mode **4/3-zoom-0** pour les tubes **4/3**, **16/9-zoom-0** pour les tubes **16/9**.
Dans les autres modes seuls quelques registres nécessitent un réglage.
Le format de réglage doit être affiché dans le menu de géométrie du mode service.
Il est possible de changer le format sans quitter le mode service.

Différents types d'affichage disponibles :

tube 4/3 : 2 modes 4/3 et 16/9
tube 16/9 : 3 modes 16/9 standard, 4/3 Zoom 0, Cinerama

Le menu correspondant montre seulement les registres à régler.

Die vollständiger Geometrie-Abgleich ist bei **4/3-Röhren** nur in der Zoomstufe **4/3-Zoom-0** und bei **16/9-Röhren** nur in der Zoomstufe **16/9-Zoom-0** notwendig.
In allen anderen Zoomstufen sind eine geringere Anzahl von Einstellungen vorzunehmen.
Während des Geometrie-Abgleiches wird zur Kontrolle ständig das aktuelle Bildformat eingeblendet. Während des Geometrie-Abgleiches ist es möglich, das Bildformat zu ändern, ohne den Service Mode zu verlassen.

Die verfügbaren Bildformate sind abhängig vom Bildrohr-Format.
4/3-Röhre : 2 Bildformate 4/3 und 16/9
16/9-Röhre : 3 Bildformate 16/9 Standard, 4/3 Zoom 0 und Cinerama

Das Abgleich-Menü zeigt immer nur die Funktionen an, die im aktuellen Bildformat eingestellt werden müssen.

La disponibilita dei modi display dipende dal formato del tubo:
tubo-4/3 : 2 modi 4/3, 16/9
tubo-16/9 : 3 modi 16/9 standard, 4/3 zoom0 cinerama
Il corrispondente menu mostra solo i registri di regolazione.
Le regolazioni complete di geometria vengono fare in base al tubo.
per **tubi-4/3** - 4/3 zoom 0
per **tubi-16/9** - 16/9 zoom 0

In tutti gli altri modi è necessario regolare solo alcuni registri.
Il formato di regolazione deve essere selezionato nel menu di geometria nel modo service.
E' possibile cambiare formato senza uscire da service mode

GEOMETRY

Display Mode

Los ajustes completos de geometría se harán de acuerdo al formato del tubo montado:
modo-4/3 para tubos de **4/3-zoom-0**
modo-16/9-zoom-0 para tubos de **16/9**.
En todos los otros modos, sólo será necesario ajustar unos pocos registros.
El modo de formato actual debe ser accedido desde el Modo Servicio.
Es posible cambiar el formato sin salir del Modo Servicio.

Los formatos que se pueden visualizar, dependen del tipo de tubo.
Tubos de 4/3 : 2 modos, 4/3 y 16/9
Tubos de 16/9: 3 modos, 16/9 estándar, 4/3 Zoom 0 y Cinerama.

El menú correspondiente mostrará sólo los ajustes a efectuar.

V-Slope

- Apply a test pattern signal to the TV with a single horizontal and vertical line on the screen.
- Select the **"VS" line** of the menu. The bottom half of the screen will go black.
- Adjust VS until the centre line of the pattern is just invisible.
- Leave the line **"V_Slope"**.
- Switch the test pattern signal to the crosshatch geometry pattern.
- Perform the geometry adjustments described below.

- Appliquer une mire de barres avec seulement une ligne blanche horizontale en milieu de l'écran.
- Sélectionner la ligne **"V-Slope"**. La moitié basse de l'écran devient noire.
- Aligner **"V_Slope"** pour que la ligne médiane soit à peine non visible.
- Commuter la mire en mode de réglage de géométrie (quadrillage).
- Effectuer les reglages de geometrie.

- Speisen Sie ein Testbild mit einem horizontalen Strich in der Bildmitte ein.
- Wählen Sie im Menü die Funktion "V-Slope" an.
  Die untere Bildhälfte wird dunkel.
- Stellen Sie "V-Slope" so ein, daß die Mittellinie fast verschwindet.
- Verlassen Sie die Funktion "V-Slope".
- Speisen Sie ein Gittertestbild ein.
- Nehmen Sie die Geometrieeinstellungen wie nebenstehend beschrieben vor.

- Applicare un monoscopio con un'unica linea bianca orizzontale al centro dello schermo
- Selezionare la riga **"V-slope"** del menu. La parte bassa dello schermo viene oscurata.
- Allineare la "Vertical Slope" in modo che la linea centrale sia appena visibile
- Abbandonare la riga **"V-slope"**.
- Posizionare il monoscopio
- Effettuare le regolazioni di geometria descritte in precedenza
- Memorizzare.

- Aplique una carta de ajuste con sólo una línea blanca horizontal y una vertical en el centro de la pantalla.
- Seleccionar en el menú, la línea **"V-Slope"**. La mitad inferior de la pantalla se pondrá oscura.
- Ajuste **"V-Slope"** justo hasta que la línea horizontal sea invisible.
- Cambiar la carta de ajuste a "cuadrícula" y efectuar los ajustes de geometria descritos a continuación
- Antes de salir, memorizar con "Store"

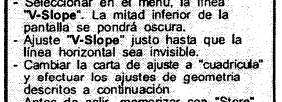

GEOMETRY

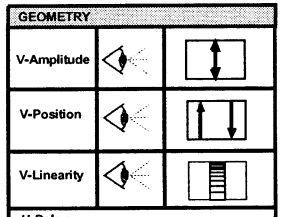

H-Delay
Horizontal-Delay

Increase/decrease value to center the image inside the displayed curtains.
Adjust H-Delay before "H-Position"

Augmenter/diminuer la valeur de H-Delay pour centrer l'image à l'intérieur des "rideaux".
Ajuster H-Delay avant "H-Position"

Zentrieren Sie das Bild horizontal zwischen die dunkelgetasteten senkrechten Balken.
Gleichen Sie H-Delay vor "H-Position" ab.

Incrementare / Decrementare il valore per centrare l'immagine.
Regolare H-Delay prima "H-Position".

Aumentar ó disminuir el valor de H-Delay para el centro de la imagen en el interior de las "cortinas".
Ajustar H-Delay antes que H-Position

Press </>: remote control; Vol. +/- : TV keyb.

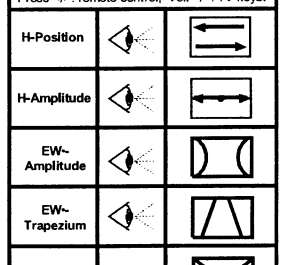

Breathing
EHT-compensation

Factory adjusted
Réservé au réglage usine
Reserviert für Fabrikeinstellungen
Riservato alla regolazione di fabbrica
Ajuste reservado fábricas

→ After setting → Store (+)

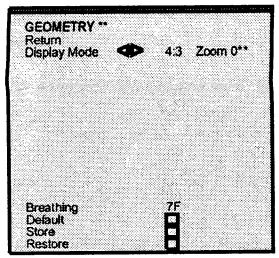

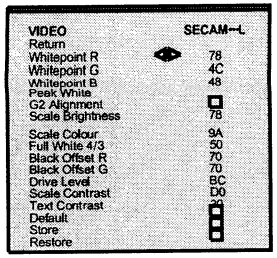

Color standard or RGB is autodetected and displayed opposite the displayed opposite the menu title

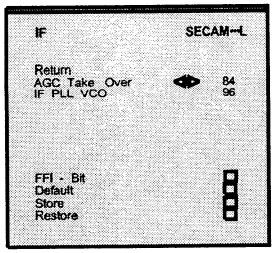

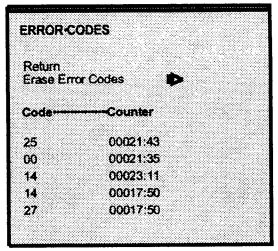

GEOMETRY

Breathing
EHT-compensation

Factory adjusted
Réservé au réglage usine
Reserviert für Fabrikeinstellungen
Riservato alla regolazione di fabbrica
Ajuste reservado fábricas

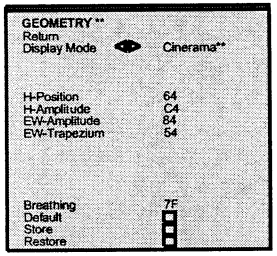

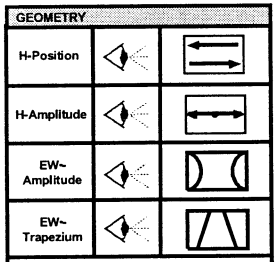

Breathing
EHT-compensation

Factory adjusted
Réservé au réglage usine
Reserviert für Fabrikeinstellungen
Riservato alla regolazione di fabbrica
Ajuste reservado fábricas

➡ After-setting· ➡ Store·(+)·☑

Note·:
**·-Specific·menu·:·16/9-set
·····Menú·específico·:·aparatos·16/9·**

VIDEO PAL

Return
Closes the sub-menu and returns to the "Main Service Menu".
Retourne au menu principal.
Schließt das Untermenü, und das Haupt-Menü des Service-Modes erscheint.
Chiude il sottomenu e fa apparire il menu principale Service Mode.
Cierra el submenú. El menú Field Service Mode aparece.
Press </>: remote control; Vol. +/- : TV keyb.

Whitepoint-R*
Whitepoint-G*
Whitepoint-B*

☼+◑+◑= standard
Grey scale test pattern
white =50%
Amplitude:
350mVBW
RF-PAL
RF-SECAM
AV1- RGB
grey

Peak-White**

☼+◑+◑=standard
Peak white test pattern
white=100%
RF-BG,·RF-L·;·AV1·RGB

Colourimeter

Tube-Type	Nits	Tube-Type	Nits
A59EHJ	380	W66EGV	480
A68EGD	400	W66LPQ	450
A68FJZ	-	W66EJY	-
A68LPQ	-	W76EGV	380
A80EJA	350	W76EJY	-
A90AFX	-	W76LPF	-

G2·Alignment

Display a full screen black OSD
Adjust G2 with SCREEN potentiometer: see adjust table
Ecran totalement noir.
Régler G2 avec le potentiomètre SCREEN : voir tableau des réglages.(p.12).
Das Bild wird dunkelgetastet
Gleichen Sie G2 mit dem SCREEN-Potentiometer wie auf seite 12. beschrieben ab.
Visualizzare uno schermo nero e regolar il potenziomero G2 riferendos alla tabella regolazione (p.12)
Pantalla totalmente oscura sin OSD. Ajustar la G2 con el potenciómetro SCREEN: ver tabla (p.12).
☑ G2_adjust on
☐ Reset G2-adjust and restores the video menu.

Note·:
*·Adjust·separate·for·PAL·RF/SECAM·RF·and·RGB/AV Whitepoints·cannot·be·aligned·in·I·PAL·

**·After·PEAK·white·adjustment·control·whitepoints setting.
Repeat·the·adjustments·if·necessary.·

VIDEO PAL

Scal. Brightness

☼+◑+◑= standard
Grey-scale-test-pattern
white=100%
black

Scal*. Colour

☼+◑+◑=standard
PAL (then SECAM +RGB)
75% Colour bar test pattern via RF.

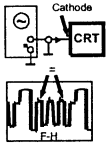

Full·White· 4/3
Black-Offset -R
Black-Offset G
Drive-Level
Scale Contrast

Factory adjusted
Réservé au réglage usine
Reserviert für Fabrikeinstellungen
Riservato alla regolazione di fabbrica
Ajuste reservado fábricas

Text Contrast ☼+◑+◑=standard

Adjust Text contrast for V=60V at pin 11 (Blue) of the CRT : 40% V peak white
Ajuster Text Contrast pour obtenir un niveau de sortie V=60V sur la cathode Bleue du tube (point 11 de la CRT): 40% V peak white.
Stellen Sie mit Text Contrast V=60V an der Blau-Kathode (Pin 11) der Bildröhre ein: 40% Vpeak white
Regolare il guadagno contrasto televideo per ottenere al catodo del blu un livello pari a V=60V (CRT pin 11): 40% Vpeak white.
Ajuste Text Gain para dejar V=60V en azul del TRC (CRT Patilla 11): 40% Vpeak white

➡ After-setting· ➡ Store·(+)·☑

IF

Return
Closes the sub-menu and returns to the "Main Service Menu".
Retourne au menu principal.
Schließt das Untermenü, und das Haupt-Menü des Servic e-Modes erscheint.
Chiude il sottomenu e fa apparire il menu principale Service Mode.
Cierra el submenú. El menú Field Service Mode aparece.
Press </>: remote control; Vol. +/- : TV keyb.

AGC--Take-Over

1mV : antenna input of the tuner
- Minimum noise-
- Minimum de bruit
- Minimum Rauschen
- Rumore minimo
- Mínimo ruido

IF-PLL-VCO

Adjust IF PLL VCO for "OK" indicating.
Adjust for standard L' and others.

FFI--Bit

Fast Filter (IF / PLL)
Filtre rapide (FI / PLL)
Schnelles filter (ZF / PLL)
Filtro /rapido (IF / PLL)
☑ Asia
☐ Europ

➡ After-setting· ➡ Store·(+)·☑

ERROR-CODE

Return
Closes the sub-menu and returns to the "Main Service Menu".
Retourne au menu principal.
Schließt das Untermenü, und das Haupt-Menü des Servic e-Modes erscheint.
Chiude il sottomenu e fa apparire il menu principale Service Mode.
Cierra el submenú. El menú Field Service Mode aparece.
Press </>: remote control; Vol. +/- : TV keyb.

Erase·Error· Codes: To·clear·all·error·codes·stored·in·the· NVM,·Action:·Long·press·(>2.5sec.).·
Press </>/OK: remote control;Vol. +/- :TV keyb.

CODE LED-Error-Codes

The·last·five·error·codes·are·stored·and·displayed·as they·occured·in·real·time,·the·most·recent·error·code is·displayed·on·the·top·line.·A·repeated·top·line·error code·has·it's·real·time·count·updated.·There·are·35· different·error·codes,·which·are·signalled·by·the·TV's· Stand-by·LED,·ranging·in·value·from·10·to·49·hex. The·error·code·is·displayed·as·two·separate·digits separated·by·a·suitable·pause,·this·is·repeated·until the·either·the·TV·fixes·the·fault·or·the·TV·is·repaired. For·example·Error·code·:·23·will·be·displayed·thus:· 2·flashes·and·a·short·pause 3·flashes·and·a·long·pause .... List·of·Errors·Codes·:·see·table

Mémorise·les·cinq·derniers·codes·erreurs·et·affiche ·en·haut·d'écran·les·plus·récents. 35·codes·erreurs·différents·sont·signalés·par·deux· digits·selon·une·séquence·spécifique· Exemple· Code·erreur·:·23·affiché 2·flashes,·courte·pause 3·flashes·longue·pause .... Voir·ci-contre·la·liste·des·codes·erreurs

Zeigt·die·letzten·5·Fehlercodes·mit·der·Laufzeit·an.· Der·zuletzt·aufgetretene·Fehler·steht·an·erster·Stelle.· Sollte·ein·Fehler·wiederholt·auftreten·wird·nur·die· Laufzeit·aktualisiert. Die·Fehlercodes·können·im·Menü·Error-Code· angezeigt·werden·oder·über·die·Kontroll-LED· angezeigt·werden.

Beispiel·für·die·Anzeige·über·die·Kontroll-LED:

Fehlercode·23·: Zweimaliges·Blinken·der·LED,·kurze·Pause. Dreimaliges·Blinken·der·LED,·lange·Pause. Auflistung·der·Fehlercodes·:·siehe·Liste

Memorizza·gli·ultimi·cinque·codici·d'errore· dopo·che·ognuno·di·essi·e·verrà· visualizzato·(attraverso·il·contatore·della·durata·di· esecuzione).·L'errore·più·recente·viene·visualizzato· in·cima.·La·ripetizione·dei·codici·d'errore·in·cima· alla·lista·non·farà·altro·che·aggiornare·la·durata·di· esecuzione.·Dal·LED·del·TV·vengono·segnalati·35· codici·d'errore·differenti,·numerati·da·10·a·49.·Il·codice· d'errore·è·indicato·da·due·cifre·separate·da·un· opportuno·intervallo·di·tempo·e·verrà·ripetuto·fino·a· quando·il·televisore·non·sarà·stato·riparato·o·non·si sarà·corretto·da·solo. Ad·es: Il·codice·d'errore·23·visualizzerà: 2·segnali·luminosi·con·pausa·breve 3·segnali·luminosi·con·pausa·lunga· Per·la·lista·dei·Codici·d'Errore,·si·veda·la·tabella

Guarda·los·últimos·cinco·códigos·de·error·cuando· cada·uno·ocurre·(gracias·al·contador·de·tiempo·de· ejecución).·El·error·más·reciente·se·visualizará·en·la· parte·superior.·Una·repetición·del·código·de·error·en· la·parte·superior·de·la·lista·solamente·actualizará·el· tiempo·de·ejecución.·El·indicador·TV·LED·indica· 35·códigos·de·error·diferentes,·de·10·a·49.·El·código· de·error·se·señala·en·forma·de·dos·dígitos·separados ·con·una·pausa·apropiada·entre·los·dos·y·se·repetirá· hasta·que·repare·el·TV·o·él·se·repare·a·sí·mismo. ·Por·ejemplo, ·Se·va·visualizar·el·código·de·error·23: ·2·parpadeos,·una·pausa·corta; ·3·parpadeos,·una·pausa·larga. ·Para·la·Lista·de·códigos·de·error,·consulte·la·tabla.

ERROR CODES

GB

10 Display effective child lock mode
11 Display timer mode
12 Audio-MSP doesn't answer anymore
13 Audio-Dpl doesn't answer anymore
14 TDA9330H doesn't answer anymore
15 TDA9321 doesn't answer anymore
16 DMU0 doesn't answer anymore
17 SAA4956 doesn't answer anymore
18 TDA9178 doesn't answer anymore
19 Tuner doesn't answer anymore
20 I2C Bus is loocked
21 I2C Bus data line held low
23 I2C Bus clock line held low
25 Switched 5V not available
26 Tube gets not warm in time
27 Deflection detects >3 times prot
28 Vertical deflection safety is effective
29 Horizontal deflection safety is effective
31 Call with pointer that was not allocated
32 A software-timer has been requested but isn't available yet
34 The NVM chip doesn't answer anymore
35 5V and 8V not available
36 Wrong address passed to the bus-handler
37 Unexpected level on NMI line found
38 Heap full - There is no RAM available for the requested operation
39 I2C Bus data line not recoverable
41 Power down detection TDA9178 (PSI)
42 Power on reset error TDA9320 (HIP)
43 Power on reset error TDA9330 (HOP)
44 NRF bit problem (only factory information)
45 FLS bit problem (only factory information)
46 NHF bit problem (only factory information)
47 NDF bit problem (only factory information)
48 XPR bit problem (only factory information)
49 Problem with bits SXA...D (factory information)

F

10 Fonction clef enfant active
11 Mode timer
12 Audio MSP ne répond plus
13 Audio-Dpl ne répond plus
14 TDA9330H ne répond plus
15 TDA9321 ne répond plus
16 DMU0 ne répond plus
17 SAA4956 ne répond plus
18 TDA9178 ne répond plus
19 Tuner ne répond plus
20 I2C-bus bloqué
21 I2C-bus data forcé au niveau bas
23 I2C-bus clock forcé au niveau bas
25 Le "5V commuté" n'est pas disponible
26 Tube ne chauffe pas a temps
27 Plus que 3-fois la déflection a détecté une "protection"
28 Sécurité déviation verticale active
29 Sécurité déviation horizontale active
31 Appel par pointeur non alloué
32 Logiciel-timer non disponible
34 NVM (mémoire) ne répond plus
35 5V et 8V non disponibles
36 NVM adresse erronée
37 Niveau incorrect sur la ligne NMI
38 Pile pleine - Il n'y a plus de RAM disponible pour l'opération requise
39 I2C-bus data non récupérable
41 Détection mauvaise alimentation TDA9178
42 Erreur de reset TDA9320
43 Erreur de reset TDA9330
44 Problème bit NRF (information usine seulement)
45 Probleme bit FLS (information usine seulement)
46 Problème bit NHF (information usine seulement)
47 Problème bit NDF (information usine seulement)
48 Problème bit XPR (information usine seulement)
49 Problème avec les bits SXA...D (information usine seulement)

D

10 Kindersicherung aktiv
11 Weckerfunktion aktiv
12 Audio-MSP antwortet nicht
13 Audio-Dpl antwortet nicht
14 TDA9330H antwortet nicht
15 TDA9321 antwortet nicht
16 DMU0 antwortet nicht
17 SAA4956 antwortet nicht
18 TDA9178 antwortet nicht
19 Tuner antwortet nicht
20 I2C Bus ist blockiert
21 I2C Bus Data ist immer L
23 I2C Bus Clock ist immer L
25 Geschaltete 5V nicht vorhanden
26 Bildrohr ist nicht rechtzeitig aufgeheizt
27 Schutzschaltung hat dreimal ausgelöst
28 Vertikal-Schutzschaltung ist aktiv
29 Horizontal-Schutzschaltung ist aktiv
31 Softwarefehler (nur für Produktionsstätten)
32 Softwarefehler (nur für Produktionsstätten)
34 NVM (EEPROM) antwortet nicht
35 5V und 8V nicht vorhanden
36 Softwarefehler (nur für Produktionsstätten)
37 Unerwarteter Zustand auf NMI-Leitung
38 Softwarefehler (nur für Produktionsstätten)
39 I2C Bus Data-Leitung nicht reaktivierbar
41 Power down detection TDA9178 (PSI)
42 Problem während des Resets TDA9320 (HIP)
43 Problem während des ResetsTDA9330 (HOP)
44 NRF Bit Problem (nur für Produktionsstätten)
45 FLS Bit Problem (nur für Produktionsstätten)
46 NHF Bit Problem (nur für Produktionsstätten)
47 NDF Bit Problem (nur für Produktionsstätten)
48 XPR Bit Problem (nur für Produktionsstätten)
49 Problem mit Bits SXA...D (nur für Produktionsst.)

I

10 Funzione child lock attiva
11 Modo timer
12 MSP-Audio non risponde
13 DPL-Audio non risponde
14 TDA9330H non risponde
15 TDA9321 non risponde
16 DMU0 non risponde
17 SAA4956 non risponde
18 TDA9178 non risponde
19 Tuner non risponde
20 I2C Bus è bloccato
21 I2C Bus data forzata bassa
23 I2C Bus clock forzata bassa
25 Tensione 5V commutata non disponibile
26 Tubo non trasmette informagione caldo entro il tempo stabilito
27 Deflessione rileva>3 volte protezione
28 Protezione deflessione verticale attiva
29 Protezione deflessione orizzontale attiva
31 Chiamata al pointer non assegnata
32 Logica timer non disponibile
34 L'integrato NVM non risponde
35 5V e 8V non disponibili
36 Indirizzamento NVM errato
37 Livello incorretto sulla linea NMI
38 Pile piena - RAM non disponibile per l'operazione richiesta
39 Linea I2C Bus non recuperabile
41 Rilevazione mancata alimentazione el TDA9178 (PSI)
42 Errore di reset TDA9320 (HIP)
43 Errore di reset TDA9330 (HOP)
44 Problema di bit NRF (informazione solo per fabrica)
45 Problema di bit FLS (informazione solo per fabrica)
47 Problema di bit NDF (informazione solo per fabrica)
48 Problema di bit XPR (informazione solo per fabrica)
49 Problema con bit SXA...D (informazione di fabrica)

E

10 Función "bloqueo niños" activa
11 Modo "timer" activado
12 El procesador de audio MSP no responde
13 El DPL de audio no responde
14 El TDA9330H no responde
15 El TDA9321 no responde
16 El DMU 0 no responde
17 El SAA4956 no responde
18 El TDA9178 no responde
19 El sintonizador no responde
20 El bus I2C está bloqueado
21 La línea de datos del bus I2C forzada a nivel bajo
23 La línea clock del bus I2C forzada a nivel bajo
25 Faltan los +5V conmutados
26 El TRC no se calienta en el tiempo establecido
27 La deflexión detecta una protección > de 3 veces
28 Seguridad de la deflexión vertical activada
29 Seguridad de la deflexión horizontal activada
31 El puntero no puede encontrar la posición solicitada
32 Una solicitud de "timer" no está disponible
34 La NVM no responde
35 Faltan los 5V y los 8V
36 Dirección errónea solicitada por el bus
37 Encontrado un nivel inesperado en la línea NMI
38 Pila llena. No queda RAM disponible para la operación solicitada
39 Línea de datos del bus I2C no recuperable
41 Detección de fallo en alimentación TDA9178 (PSI)
42 Error de reset en el encendido TDA9320 (HIP)
43 Error de reset en el encendido TDA9330 (HOP)
44 Fallo en el bit NRF (información sólo para fábrica)
45 Fallo en el bit FLS (información sólo para fábrica)
46 Fallo en el bit NHF (información sólo para fábrica)
48 Fallo en el bit NDF (información sólo para fábrica)
49 Fallo en los bits SXA...D (información sólo para fábrica)

GEOMETRY MODE ALIGNMENT

4/3 picture tube

A ICC20 4/3 set needs a geometry alignment only in the 4/3 Zoom 0 mode. All other formats and zoom mode are calculated.

Un chassis ICC20 4/3 ne nécessite des réglages de géométrie que dans le mode 4/3 zoom 0. La géométrie des autres formats et zoom est calculée.

Beim Chassis ICC20 4/3 ist ein Geometrie-Abgleich nur im Bildformat 4/3 Zoom 0 notwendig. Die Werte für alle weiteren Formate und Zoomstufen werden berechnet.

Il telaio ICC20 4/3 richiede l'allineamento solo nel formato 4/3 zoom 0. Tutti gli altri formati zoom sono calcolati.

Un TV ICC20 4/3 sólo necesita ajustar la geometria en modo 4/3 Zoom 0. Todos los otros formatos y modos de zoom, son calculados.

Signal: 4/3 test pattern

4/3 standard mode zoom 0	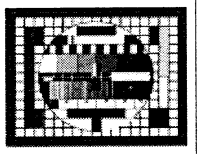	**Overscan V=107%, H=107%** 1- Adjust Vertical position and Vertical amplitude 2- Adjust Vertical Slope and linearity 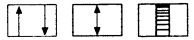 3- Adjust Horizontal Delay, Horizontal Position and Horizontal amplitude 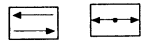 4-Adjust EW Amplitude ,EW Shape and Trapezium, EW Corner, 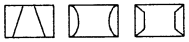 5-Adjust EW Symmetry and Horizontal parallelogram

16/9 picture tube

A ICC20 16/9 set needs a complete geometry alignment in the 16/9 Zoom 0 mode and additionnaly an alignment of H-amplitude (104%), EW-Amplitude, H-position and EW-trapezium in Cinerama mode (if fitted). All others formats all others formats and zoom mode are calculated.

Un chassis ICC20 16/9 ne nécessite un alignement complet des réglages de géométrie que dans le mode 16/9 zoom 0 et en outre des réglages de H-amplitude (104%), EW-Amplitude, H-position et EW-trapèze en mode Cinérama (si les circuits correspondants sont insérés).
La géométrie des autres formats et zoom est calculée.

Beim Chassis ICC20 16/9 ist ein vollständiger Geometrie-Abgleich nur im Bildformat 16/9 Zoom 0 notwendig. Wenn das Bildformat Cinerama verfügbar ist, müssen für diesen H-Amplitude (104%),EW-Amplitude, H-Position und EW-Trapezium abgeglichen werden.
Die Werte für alle weiteren Formate und Zoomstufen werden berechnet.

Il telaio ICC20 16/9 richiede l'allineamento nel formato 16/9 zoom 0 e un allineamento supplementare dell' Ampiezza H (104%), Ampiezza EW Posizione H e Trapezio EW nel modo Cinerama. Tutte le regolazioni negli altri formati zoom sono calcolate.

Un TV ICC20 16/9 necesita un ajuste completo de geometria en el modo 16/9 zoom 0 y además un ajuste de la anchura horizontal (104%), posición horizontal y amplitud / trapecio E/W en modo "Cinerama" (si está incorporado). Todos los otros formatos y modos de zoom, son calculados.

Signal: 4/3 test pattern

16/9 standard mode zoom 0	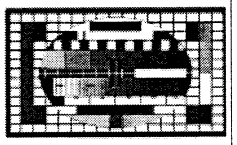	**Overscan V=107%, H=104%** 1- Adjust Vertical position and Vertical amplitude 2- Adjust Vertical Slope and linearity 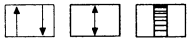 3- Adjust Horizontal Delay, Horizontal Position and Horizontal amplitude 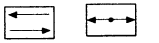 4-Adjust EW Amplitude ,EW Shape and Trapezium, EW Corner, 5-Adjust EW Symmetry and Horizontal parallelogram
4/3 CINERAMA mode	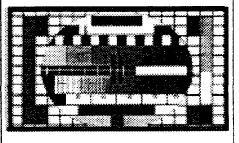	**Mode CINERAMA** **Overscan V=114%, H=104%** 1- Adjust Horizontal position and Horizontal amplitude 2- Adjust EW Amplitude, EW Trapezium

ALLGEMEINE INFORMATIONEN

FEHLERSUCH-METHODIK

1 - EINSCHALTEN DES GERÄTES:

- Beobachten Sie beim Einschalten des Gerätes die Standby-LED. Abweichungen vom "normalen" Einschaltverhalten des Gerätes können Hinweise auf eventuelle Fehler im Gerät und deren möglichen Ursachen geben.

2 - FEHLERSUCHE : VERHALTEN DER LED :

In bestimmten Fällen bedeutet ein Blinken der LED die Anzeige eines Fehlercodes:

- Zählen Sie die Anzahl des Aufblinkens mit. Der zweistellige Fehlercode wird in zwei Gruppen von Blinkimpulsen, getrennt von einer 0,7s Pause, dargestellt.
  Die Anzeige des Fehlercodes wird mehrere Male wiederholt.

Siehe ***TABELLE DER FEHLERCODES***.

3 - FEHLERSUCHE :

Das Chassis ICC20 besteht im Wesentlichen aus zwei Platinen. Zuerst sollte festgestellt werden, welche Platine defekt ist und ob eine der Schutzschaltungen abgesprochen hat.

ÜBERPRÜFEN SIE ZUERST DEN KORREKTEN SITZ DIE BEIDEN PLATINEN VERBINDENDEN **FLACHBANDKABEL**

a - Das Chassis arbeitet ganz oder teilweise :
- Beobachten Sie die LED benutzen Sie die die Fehlersuchmethoden 1 und 2.
- Schauen Sie auch bei "***Symptom*** " nach ähnlichen Fehlererscheinungen nach.

b - Das Chassis geht ständig oder periodisch in Schutzzustand :
b.1- Beobachten Sie das Verhalten der LED (Blinken rot, ständig orange gefolgt von Blinken usw.)
-Wählen Sie die entsprechende Box: " ***Fehlersuche über das Verhalten der LED*** ".

Siehe Tabelle der Fehlercodes.
Beispiel :
Das Gerät macht drei Startversuche ehe es in Standby geht :

- Fehlercode 25 : +5V nicht verfügbar
- Fehlercode 35 : +5V and +8V nicht verfügbar.
- Fehlercode 37 : Unerwarteter Zustand auf der NMI (POWER FAIL)-Leitung

Dieses deutet auf ein Fehler auf der "***NETZTEIL- UND ABLENKPLATINE*** " hin.
Bitte beachten Sie :
Diese Informationen sind nur Hinweise ! Die Anzeige der Fehlercodes und die Reaktion des Gerätes ist stark davonabhängig, wie der Fehler beschaffen ist und dem Zeitpunkt, wann er festgestellt wird. (Betriebszustand des Gerätes).

Wird ein Fehler während der Warmstarroutine dreimal festgestellt, wird im EEPROM zusätzlich zum Code der Fehlerursache auch der Fehlercode 27 mit abgespeichert

b.2- Die LED bleibt aus:
Überprüfen Sie zuerst die "***NETZTEIL- UND ABLENKPLATINE*** ".

ALLGEMEINE INFORMATIONEN - VERHALTEN DER LED

Blinken der LED

Anzeige eines Fehlercodes
Die Fehlercodes werden durch ein Blinken der roten

Zählen Sie die Anzahl der Blinkimpulse: der Fehlercode wird in zwei Gruppenn, getrennt von einer 0,7s Pause übertragen. Zwischen der Anzeige von zwei Fehlercodes ist eine Pause von 1.7 s.

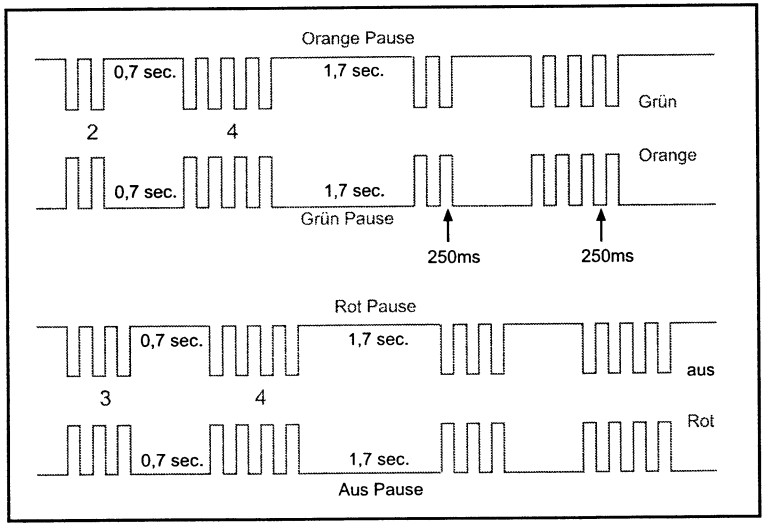

CODES	FEHLER
10	Kindersicherung aktiv (Kein Fehlercode!)
11	Weckerfunktion aktiv (Kein Fehlercode !)
12	Erster Audio- MSP antwortet nicht
13	(Audio- DPL antwortet nicht)
14	TDA9330H antwortet nicht (oder +8V fehlen)
15	TDA9321 antwortet nicht (oder +8V fehlen)
16	DMU0 antwortet nicht
17	SAA4956 antwortet nicht
18	TDA9178 antwortet nicht
19	(Tuner antwortet nicht)
20	(I2C Bus ist blockiert)
21	I2C Bus Data ist immer L
23	I2C Bus Clock ist immer L
25	Geschaltete 5V nicht vorhanden
26	Bildrohr ist nicht rechtzeitig aufgeheizt
27	Schutzschaltung hat dreimal ausgelöst (wird nur im Service- Mode angezeigt)
28	Vertikal- Schutzschaltung ist aktiv
29	Horizontal- Schutzschaltung ist aktiv
31	Softwarefehler (nur für Produktionsstätten)
32	Softwarefehler (nur für Produktionsstätten)
34	NVM (EEPROM) antwortet nicht
35	5V und 8V nicht vorhanden (Netzspannung zu niedrig/ Power- Fail- Schaltung)
36	Softwarefehler (nur für Produktionsstätten)
37	Unerwarteter Zustand auf NMI- Leitung (z. B. durch Überschlag im Bildrohr)
38	Softwarefehler (nur für Produktionsstätten)
39	I2C Bus Data- Leitung nicht reaktivierbar
41	PDD Flag TDA9178 zu geringe Betriebsspannung
42	POR Flag TDA9321 zu geringe Betriebsspannung
43	POR Flag TDA9330H zu geringe Betriebsspannung
44	NRF Flag TDA9330H Referenz- PLL (Clock) nicht eingerastet
45	FLS Flag TDA9330H Pin 5 ('FLASH')> 2V, Ablenkschutzschaltung aktiv
46	NHF Flag TDA9330H Pin 13 H- Rückschlagimpuls fehlt
47	NDF Flag TDA9330H Pin 9 VERTICAL_ GUARD fehlt oder dauert zu lange
48	XPR Flag TDA9330H Pin 4 Überspannung (> 4V)
49	PSX Flag TDA9321H Quarz (Clock) nicht vorhanden

ÜBERPRÜFUNG SIGNAL-PLATINE

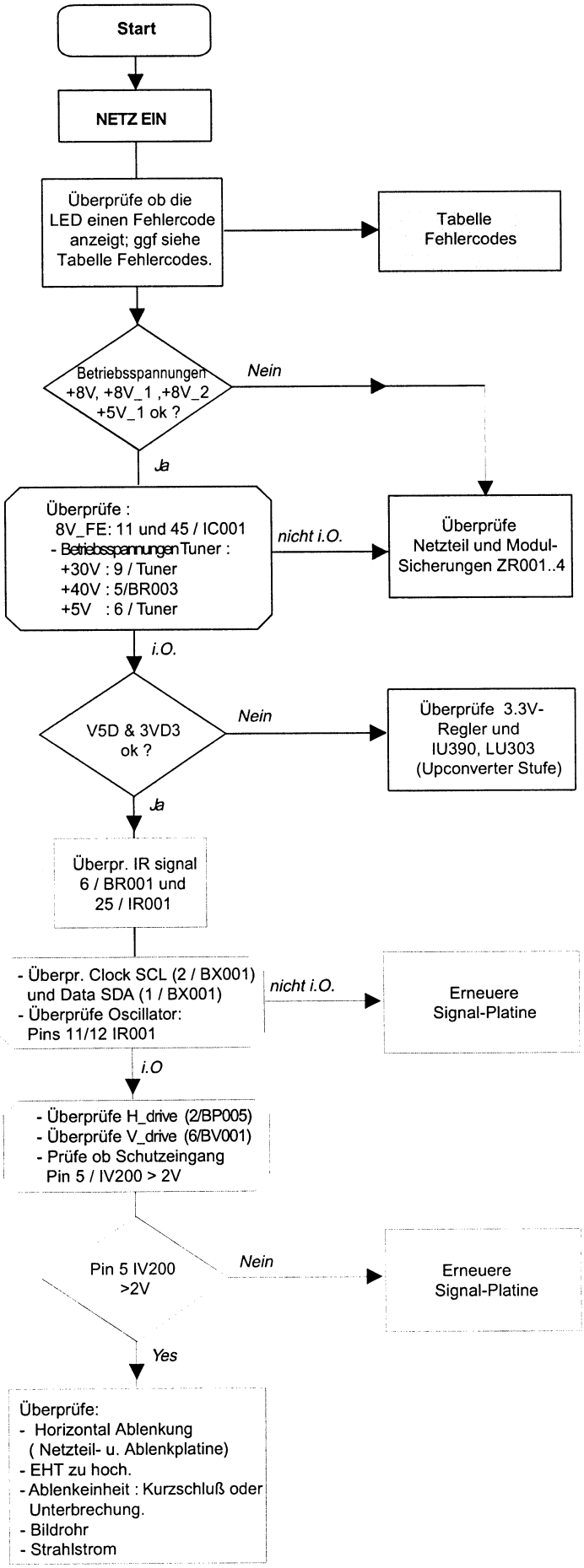

WARNING : *Before servicing this chassis read the safety recommendations.*
ATTENTION : *Avant toute intervention sur ce châssis, lire les recommandations de sécurité.*
ACHTUNG : *Vor jedem Eingriff auf diesem Chassis, die Sicherheitsvorschriften lesen.*
ATTENZIONE : *Prima di intervenire sullo chassis, leggere le norme di sicurezza.*
IMPORTANTE : *Antes de cualquier intervención, leer las recomendaciones de seguridad.*

Do not disconnect modules when they are enregized! Repairs on power supply section are to be carried out only with isolating transformer.
Ne pas retirer les modules lorsqu'ils sont sous tension. N'effectuer les travaux de maintenance sur la partie reliée au secteur (Switch Mode) qu'au travers d'un transformateur d'isolement.
Module nicht bei eingeschaltetem Gerät entfernen ! Servicearbeiten am Netzteil nur unter Verwendung eines Regeltrenntrafos durchführen.
Non scollegare i moduli quando sono alimentati! Intraprendere riparazioni sulla sezione alimentatore solo con trasformatore isolante.
No desconectar los módulos cuando están activados. Las reparaciones en la sección de alimentación de energía deben ser ejecutadas solamente con un transformador de separación.

⚠ Indicates critical safety components, and identical components should be used for replacement. Only then can the operational safety be garanteed.
Le remplacement des éléments de sécurité (repérés avec le symbole ⚠) par des composants non homologués selon la Norme CEI 65 entraine la non-conformité de l'appareil. Dans ce cas, la responsabilité du fabricant n'est plus engagée.
Wenn Sicherheitsteile (mit dem Symbol⚠ gekennzeichnet) nicht durch Original - Ersatzteile ersetzt werden, erlischt die Haftung des Herstellers.
La sostituzione degli elementi di sicurezza (marcati con il segno⚠) con componenti non omologati secondo la norma CEI 65 comporta la non conformitá dell'apparecchio. In tal caso è "esclusa la responsabilità " del costruttore.
La sustitución de elementos de seguridad (marcados con el simbolo ⚠) por componentes no homologados segun la norma CEI 65, provoca la no conformidad del aparato. En ese caso, el fabricante cesa de ser responsable.

Note : During measurements in the power supply unit, use the primary power unit ground (Emit. TP060).
Attention : Mesures dans le bloc alimentation. Utiliser la masse du bloc alimentation (Emet. TP060).
Achtung : Bei Messungen im Primärnetzteil. Primärnetzteilmasse verwenden (Emit. TP060).
Attentionze : Misure nell'alimentatore primario. Usare massa alimentazione primario (Emet. TP060).
Cuidado : Medida en el bloque de alimentación. Utilizar la masa del bloque de alimentación (Emet. TP060).

MEASUREMENT CONDITIONS - CONDITIONS DE MESURES - MESSBEDINGUNGEN CONDIZIONI DI MISURA - CONDICIONES DE MEDIDAS

RECEIVER :
Bar test pattern : PAL, I standard, 100% white.

- On UHF, input level 1 mV
- Via the scart socket, input level 1 Vpp

Colour, contrast and brightness at mid-position, sound at minimum.
Programme selected : PR 01.
DC voltages measured between the point and earth using a digital voltmeter.

RECEPTEUR :
Mire de barres : SECAM, Norm L, Blanc 100%.

- En UHF, niveau d'entrée 1 mV
- Par la prise Péritélévision, niveau d'entrée 1Vcc.

Couleur, contraste, lumière à mi-course, son minimum.
Programme affecté PR 01.
Tensions continues relevées par rapport à la masse avec un voltmètre numérique.

EMPFÄNGER :
Farbbalken : PAL, Norm G, Weiss 100%

- Bei UHF Eingangspegel 1 mV.
- Über die Scartbuchse : Eingangspegel 1 Vss.

Farbe, Kontrast, Helligkeit in der Mitte des Bereichs, Ton auf Minimum.
Zugeordnetes Programm PR 01.
Gleichspannungen mit einem digitalen Voltmeter zur Masse gemessen.

RICEVITORE :
Monoscopio per barre : PAL, norma G. bianco 100%.

- In UHF, livello d'entrata 1 mV,
- Per la presa SCART, livello d'entrata 1 Vcc.

Colore, Contrasto, Luce a metä corsa, Suono minimo.
Programma designato PR 01.
Tensioni continue rilevate rispetto alla massa con un voltametro numerico.

RECEPTOR :
Mira de barras : PAL, norma G, blanco 100%.

- En UHF, nivel de entrada 1 mV,
- Por la toma Peritelevision, nivel de entrada 1 Vpp.

Color, Contraste, luz a mitad de carrera, Sonido minimo.
Programa afectado PR 01.
Tensiones continuas marcadas en relacion a la masa con un voltimetro digital.

CLASS 1 LASER PRODUCT
APPAREIL A LASER DE CLASSE 1
LASER KLASSE 1
APARATO CON LASER DE CLASE 1
APPARECCHIO CON LASER DI CLASSE 1

DANGER :	**Invisible laser radiation when open and interlock failed or defeated. Avoid direct exposure to beam.**
ATTENTION :	**Le rayon laser est invisible. Eviter l'exposition directe lors de la maintenance.**
VORSICHT BEI REPARATUREN :	**Bei geöffneter Schublade und Defekt der Sicherheits - vorrichtungen besteht die Gefahr unsichtbaren Laserlichts. Niemals direkt in den Laserstrahl sehen.**
ATTENZIONE :	**Il raggio laser è invisibile. Evitare l'esposizione diretta durante la manutenzione.**
IMPORTANTE :	**El rayo laser es invisible. Evitar la exposición directa en el momento del mantenimiento.**

PREVENTION OF ELECTRO STATIC DISCHARGE (ESD) TO ELECTROSTATICALLY SENSITIVE DEVICES (ESD)

Some semiconductor (solid state) devices can be damaged easily by static electricity.
Such components commonly are called Electrostatically Sensitive Devices (ESD). Examples of typical ESD devices are integrated circuits and some field-effect transistors and semiconductor chip components. The following techniques should be used to help reduce the incidence of component damage caused by static electricity.

1. Immediately before handling any semiconductor component or semiconductor-equipped assembly, drain off any electrostatic charge on your body by touching a known earth ground. Alternatively, obtain and wear a commercially available discharging wrist strap device, which should be removed for potential shock reasons prior to applying power to the unit under test.
2. After removing an electrical assembly equipped with ESD devices, place the assembly on a conductive surface such as aluminum foil, to prevent electrostatic charge buildup or exposure of the assembly.
3. Use only a grounded-tip soldering iron to solder or unsolder ESD devices.
4. Use only an anti-static solder removal devices. Some solder removal devices not classified as "anti-static" can generate electrical charges sufficient to damage ESD devices.
5. Do not use freon-propelled chemicals. These can generate electrical charges sufficient to damage ESD devices.
6. Do not remove a replacement ESD device from its protective package until immediately before your are ready to install it. (Most replacement ESD devices are packaged with leads electrically shorted together by conductive foam, aluminum foil or comparable conductive materials).
7. Immediately before removing the protective materials from the leads of a replacement ESD device, touch the protective material to the chassis or circuit assembly into which the device will be installed.
   CAUTION : Be sure no power is applied to the chassis or circuit, and observe all other safety precautions.
8. Minimize bodily motions when handling unpackaged replacement ESD devices. (Otherwise harmless motion such as the brushing together of your clothes fabric or the lifting of your foot from a carpeted floor can generate static electricity sufficient to damage an ESD device).

IMPORTANT SAFETY NOTICE

There are special components used in this equipment which are imporant for safety, these part are marked by ⚠ symbol on the schematic circuit diagrams and replacement part list. It is essential that these safety critical components are replaced with the manufacture's specified parts to prevent electric shock, fire, or other hazards. do not attempt to modify the original design without permission of the manufacturer.

DVD PLAYER REMOVAL - DEPOSE DU LECTEUR DVD -
AUSBAU DES DVD-SPIELERS
RIMOZIONE DEL DVD - RETIRADA DEL REPRODUCTOR DVD

GB

1 - Carefully remove the connexion cable between the TV chassis and the DVD player
2 - Disengage the TV chassis.
3 - Remove the screws (1) and lift off the DVD player (2) (Fig.1).

F

1 - Déconnecter les cables de liaison entre le chassis TV et le lecteur de DVD player.
2 - Dégager le TV chassis.
3 - Retirer les trois vis de fixation (1) et déposer le lecteur de DVD (2) (Fig.1).

D

1 - Entfernen Sie vorsichtig das Verbindungskabel zwi schen dem TV-Chassis und dem DVD-Player
2 - Nehmen Sie das TV-Chassis aus dem Gehäuse.
3 - Entfernen Sie die Schrauben (1) und heben Sie den DVD-Spieler heraus (2) (Fig.1).

I

1 - Rimuovere con cura il cavo di connessione tra il telaio e il DVD.
2 - Sfilare il telaio TV.
3 - Tolgliere le viti (1) e estrarre il DVD (Fig.1).

E

1 - Retirar con cuidado el cable de conexión entre el chasis TV y el reproductor DVD.
2 - Desenganchar el chasis TV.
3 - Retirar los tornillos (1) y leventar verticalmente el reproductor DVD (2) (Fig.1).

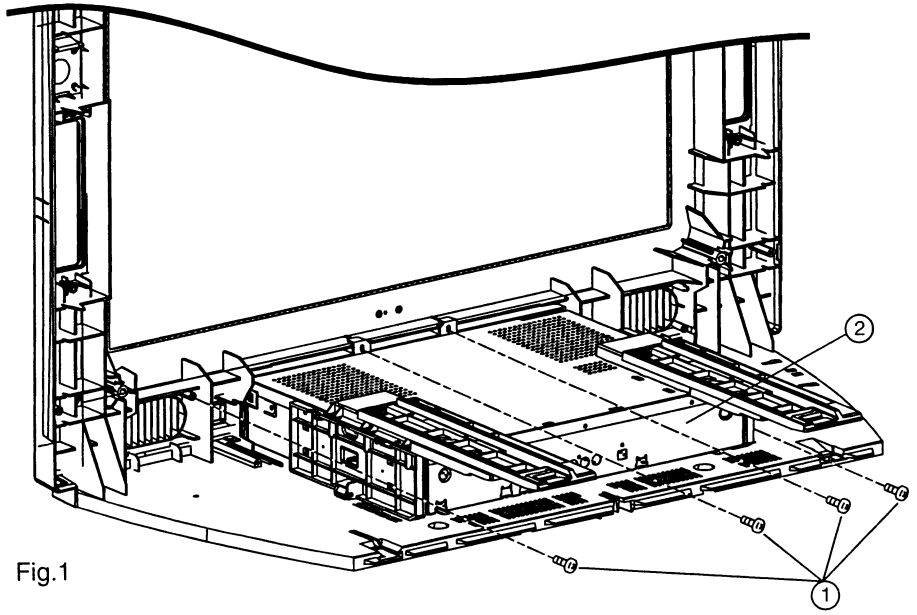

Fig.1

ADJUSTMENT PROCEDURES

Note: for the maintenance, it is possible to activate the DVD module as a standalone unit, see page 5.

1. Handling the optical pickup

The laser diode used in the optical pickup may break down due to potential differences caused by electricity produced by clothing or the human body, care should therefore be taken to prevent electrostatic discharge whilst repairing the optical pickup.

The following method is recommended.

1) Place a conductive sheet on the work bench (The black sheet used for wrapping repair parts.)
2) Place the set on the conductive sheet so that the chassis is grounded to the sheet.
3) Place your hands on the conductive sheet (doing this gives them the same ground as the sheet.
4) Remove the optical pickup block
5) Perform work on top of the conductive sheet. Be careful not to let your clothes or any other static sources to touch the unit.

* Grounding the Human Body, use an antistatic wrist strap to discharge static electricity from your body.
* Grounding the work place, use either an antistatic matt or a sheet of steel on the area where the optical pickup is to be placed and ground the matt/sheet.

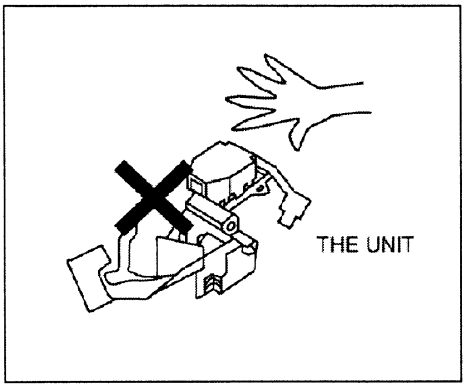

Fig. 1-1

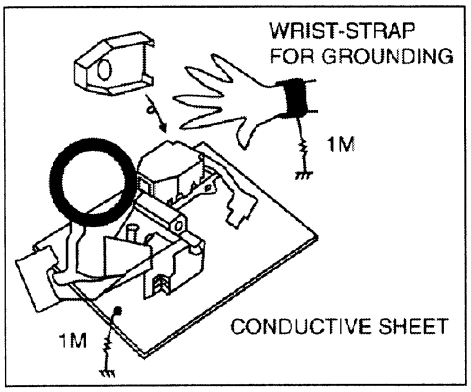

Fig. 1-2

6) Short the short terminal Ⓐ on the PCB, which is in-side the Pickup Assembly, before deconnecting the flexible cable Ⓑ for replacing the Pickup. (The short terminal is shorted when the Pickup Assembly is being lifted or moved.)

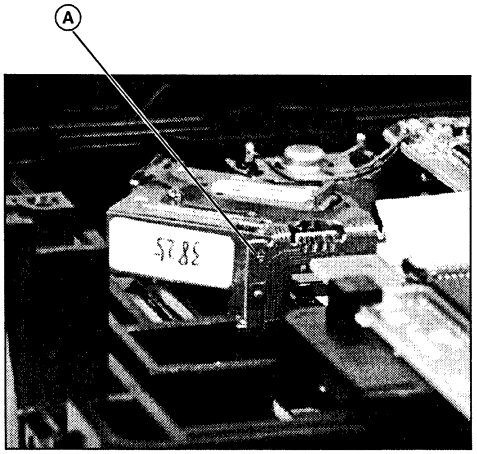

Fig. 1-3

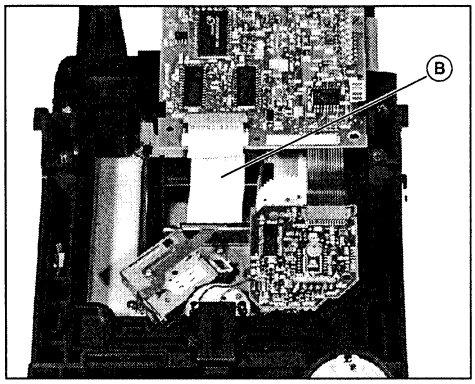

Fig. 1-4

(7) After replacing the Pickup, open the short terminal on the PCB.

2. Disassembly and assembly

Note : Reassemble in reverse order.

2.1 Removing the top cabinet

1) Remove the 3 screws of the right bracket. Pull the clip ⑪ in the direction of arrow Ⓒ, then push the bracket in the direction of arrow Ⓓ.
2) Perform the same operation for the left bracket.
3) Remove the screw on the back of the top cabinet
4) Lift the top cabinet up.

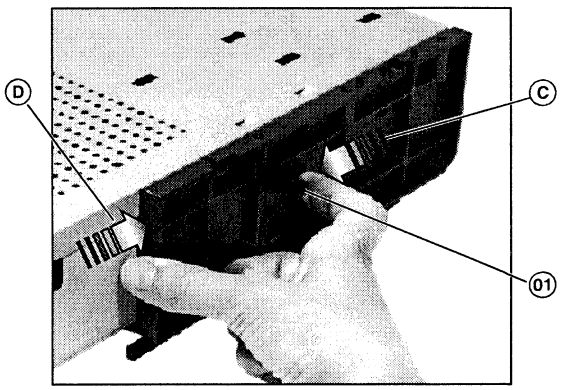

fig 2.1

2-2 Removing the door-tray

1) Switch the power on and open the tray.
2) Remove the door-tray.
3) Close tray and switch the power off.

Note : If the tray cannot be opened, insert a screw driver into the plastic slot accessible through emergency hole ⑫ (as shown below) and push it in the direction of arrow Ⓔ Open the tray manually.

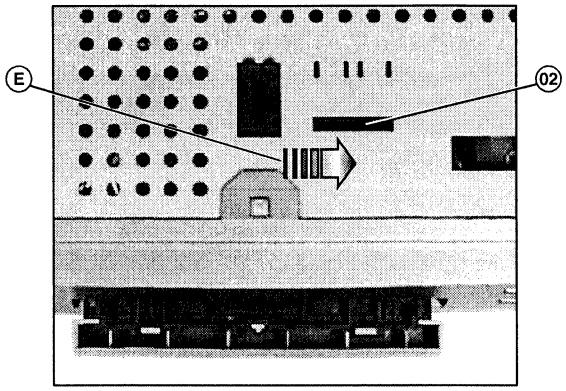

fig 2.2

2-3 Removing the front panel

1) Disengage the 3 clips located under the set and the 2 clips located on both sides of the front panel.
2) Remove connector BK225 between the main board and KDB1.
3) Dismount the Front panel.

2-4 Removing the tray

1) Remove two screws ⑬ .
2) Disengage 4 clips ⑭ .
3) Remove cover ⑮ .
4) Open and pull the tray.

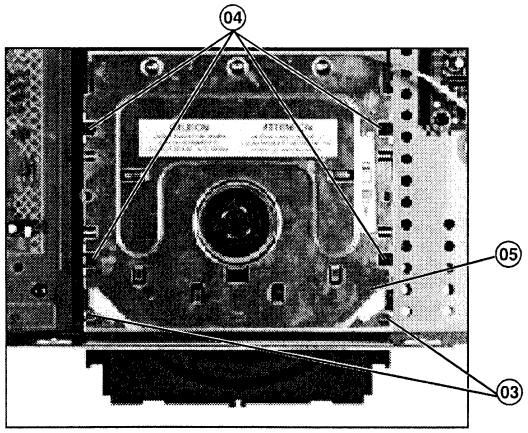

fig 2.4.1

2-5 Removing the mechanical assembly

1) Disconnect BU702 ⑯ and ground cable ⑰ .

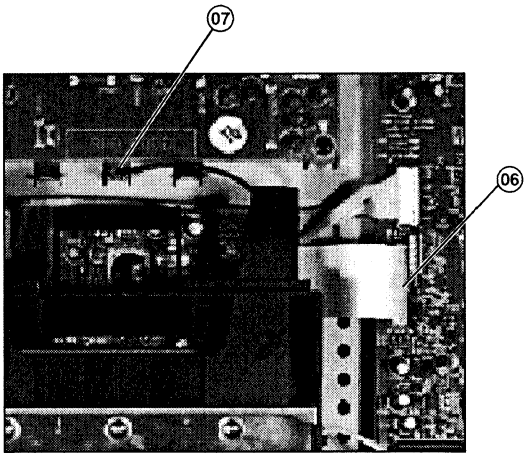

fig 2.5.1

2) Remove two screws ⑱ .
3) Disengage clip ⑲ .

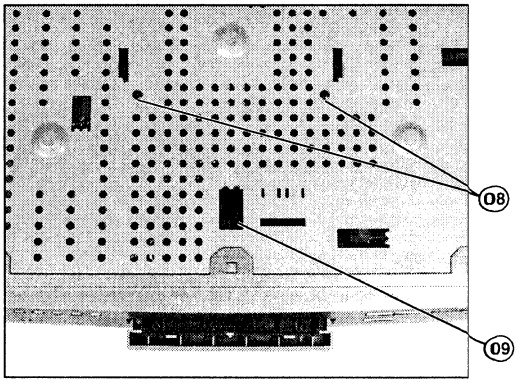

fig 2.5.2

4) Disengage 2 clips ⑩ .

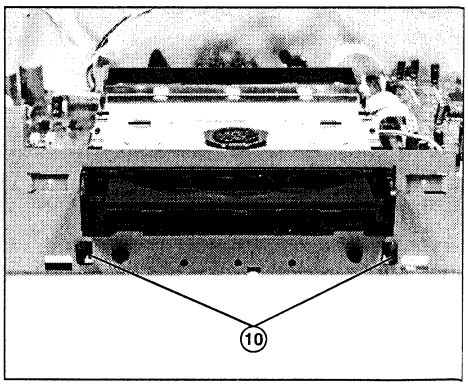

fig 2.5.3

5) Push the mechanical assembly backward and lift it up.

1) Connect BP301 to the mains (220Vac),
2) Connect HP305 (three wires cable with female connector from DVD power board) to HK002 (Three wires cable with male connector from KDB2 board) to supply 5V and GND to the KDB board (see diagram below),
3) To activate the DVD module as a standalone unit, press on the front keyboard, the three keys "MENU", "STOP" and "OK", simultaneously during at least 5 seconds. Then the DVD module can be controlled by the front keyboard or the RCU.

Note: the step 3 must be repeated each time the mains is switched off and switched on.

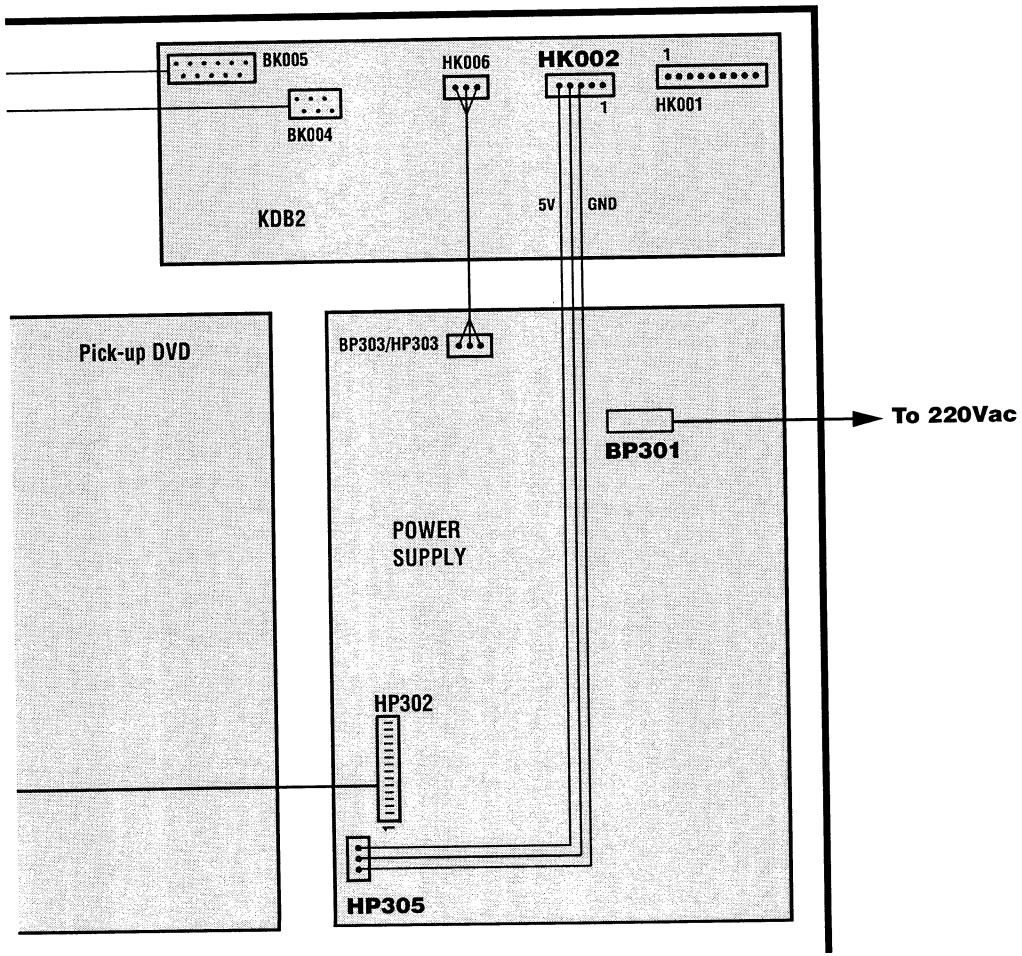

RUNNING POWER SUPPLY IN STAND ALONE CONDITION

⚠ All of the following tests must be carried out with the MAINS switched OFF.

Any operations carried out with the MAINS switched ON may lead to components being destroyed.

With the following configuration it is possible to start the power supply in stand alone function.

- Disconnect mains.
- Remove connector BP005 and BL111.
- Make a connection between pin 18 (PO) of BP005 to GND .
- Connect pin 21 (CNT2_20V) of BP005 to cathode of DP120 (+20V).
- Connect a resistor 12R0/5W between +5V and GND.
- Connect a resistor 18R0/5W between +8V and GND.
- Connect a resistor 4k0/10W between USYS and GND.
  ONLY NECESSARY IF NO CRT BOARD CONNECTED

↓

- Connect mains .
- Switch «ON».
- Remove connection between pin 18 (PO) of BP005 and GND.

↓

- Measure the following voltages :

Voltage	Value
Usyst (C / DP110) (G/7)*	185V +/-10V
+20V (C / DP120) (G/5)*	25.5V =/- 1V
+10V (C / DP140) (G/6)*	11.5V +/-0.6V
+8V (C / DP194) (H/1)*	8.15V +/-0.25V
+6V (C / DP150) (F/5)*	6.1V +/-0.2V
+5V (A / DP152) (H/3)*	5.1V +/-0.15V
+UA (C / DP130) (F/9)*	22V +/2V
-UA (A / DP135 (J/8)*	-20V+/-2V

(*) Components location reference

NOTE : Don't forget to remove all additionnal loads, the connection between pin 21 of BP005 and +20V and reconnect BP005, BL111 after stand alone function.

GENERAL INFORMATION

METHODOLOGY

1 - SWITCHING "ON" THE TV:

- Observe the behaviour of the two-coloured LED: note the various stages and compare them with the normal cycle of events.
By watching this, the point at which the problem arises and the part of the circuit which needs to be investigated cab be identified.

2 - TROUBLESHOOTING PROCEDURE : LED BEHAVIOUR :

In certain cases a flashing LED signifies the transmission of an error code message:

LED flashes : Message transmission.
- Count the flashes : coded into bursts separated by a pause of 0.7s and repeated several times.
répétées plusieurs fois.

See the ***ERROR CODE TABLE***.

3 - FAULT FINDING :

The ICC20 chassis being equiped with two main boards it is necessary to identify in a first time the defective board and what security is available.

After the check of the ***GOOD CONNECTION BETWEEN THE TWO MAIN BOARDS***

- Operation stages 1 and 2:

a - The chassis set operates fully or partially:
- Use LED message observation fault finding methods 1 and 2.
see also the fault related to fault finding by "***Symptom***".

b - **The chassis set goes into permanent or cyclical security mode** :
b.1- **Observe LED behaviour** (flashing red, stable orange followed by flashing, etc...)
Select the relevant box in the column : " ***LED behavior fault finding***".

See the Error Code Table information.
For example :
Three attemps to switch on the power supply before standby :

- Error code 25 : +5V not available
- Error Code 35 : +5V and +8V not available.
- error Code 37 : No correct level on the NMI (POWER FAIL) line

indicate a problem of "***POWER / SCAN BOARD***".
Please Note :
These information give only an indication because, they don't display all the cases : since various fault generates the same error code or signale a secondary effect relative to the "***SMALL SIGNAL BOARD***" for example.

In the service mode, it is possible to consult a record of the latest error codes which have occured in the television set.

b.2- **LED stays off** :
Make beforehand the diagnosis of the "***POWER / SCAN BOARD***" .

GENERAL INFORMATION - LED BEHAVIOUR

LED FLASHES

Message transmission.
The Error codes are signalled by the RED Standby LED.

Count number of flashes : error code is signalled in two burst separated by a 0.7 s pause and repeated several times.
There is 1.7 s between each code sequence .

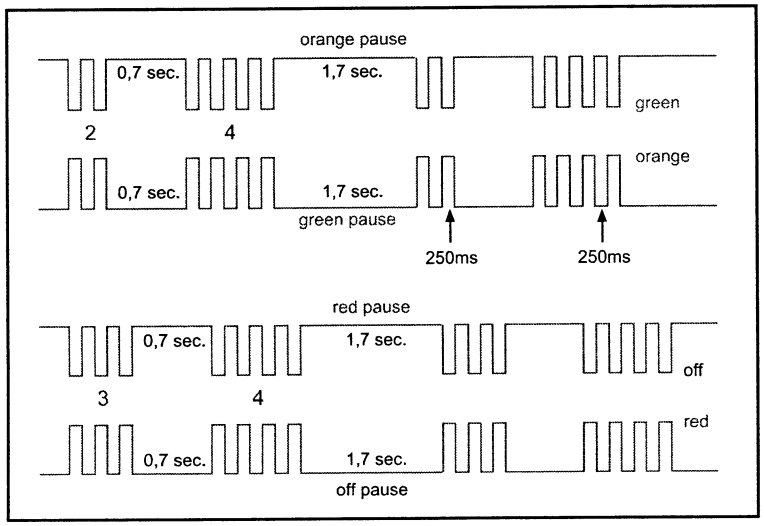

CODES	DEFAULT
10	Display effective child lock mode
11	Display timer mode
12	Audio-MSP doesn't answer anymore
13	Audio-Dpl doesn't answer anymore
14	TDA9330H doesn't answer anymore
15	TDA9321 doesn't answer anymore
16	DMU0 doesn't answer anymore
17	SAA4956 doesn't answer anymore
18	TDA9178 doesn't answer anymore
19	Tuner doesn't answer anymore
20	I2C Bus is loocked
21	I2C Bus data line held low
23	I2C Bus clock line held low
25	Switched 5V not available
26	Tube gets not warm in time
27	Deflection detects >3 times prot
28	Vertical deflection safety is effective
29	Horizontal deflection safety is effective
31	Call with pointer that was not allocated
32	A software-timer has been requested but isn't available yet
34	The NVM chip doesn't answer anymore
35	5V and 8V not available
36	Wrong address passed to the bus-handler
37	Unexpected level on NMI line found
38	Heap full - There is no RAM available for the requested operation
39	I2C Bus data line not recoverable
41	Power down detection TDA9178 (PSI)
42	Power on reset error TDA9320 (HIP)
43	Power on reset error TDA9330 (HOP)
44	NRF bit problem (only factory information)
45	FLS bit problem (only factory information)
46	NHF bit problem (only factory information)
47	NDF bit problem (only factory information)
48	XPR bit problem (only factory information)
49	Problem with bits SXA...D (factory information)

MAIN POWER SUPPLY CHECK

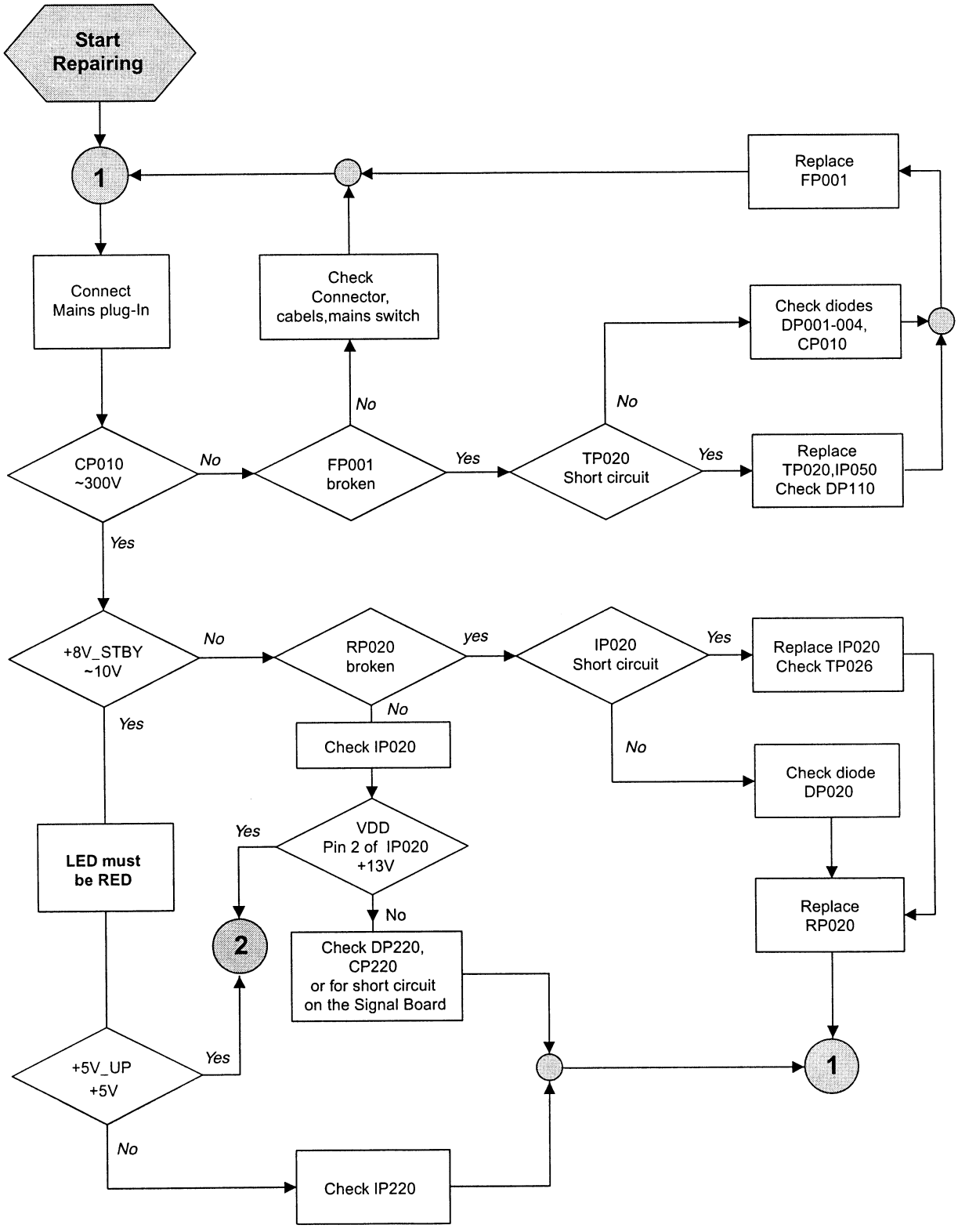

MAIN POWER SUPPLY CHECK

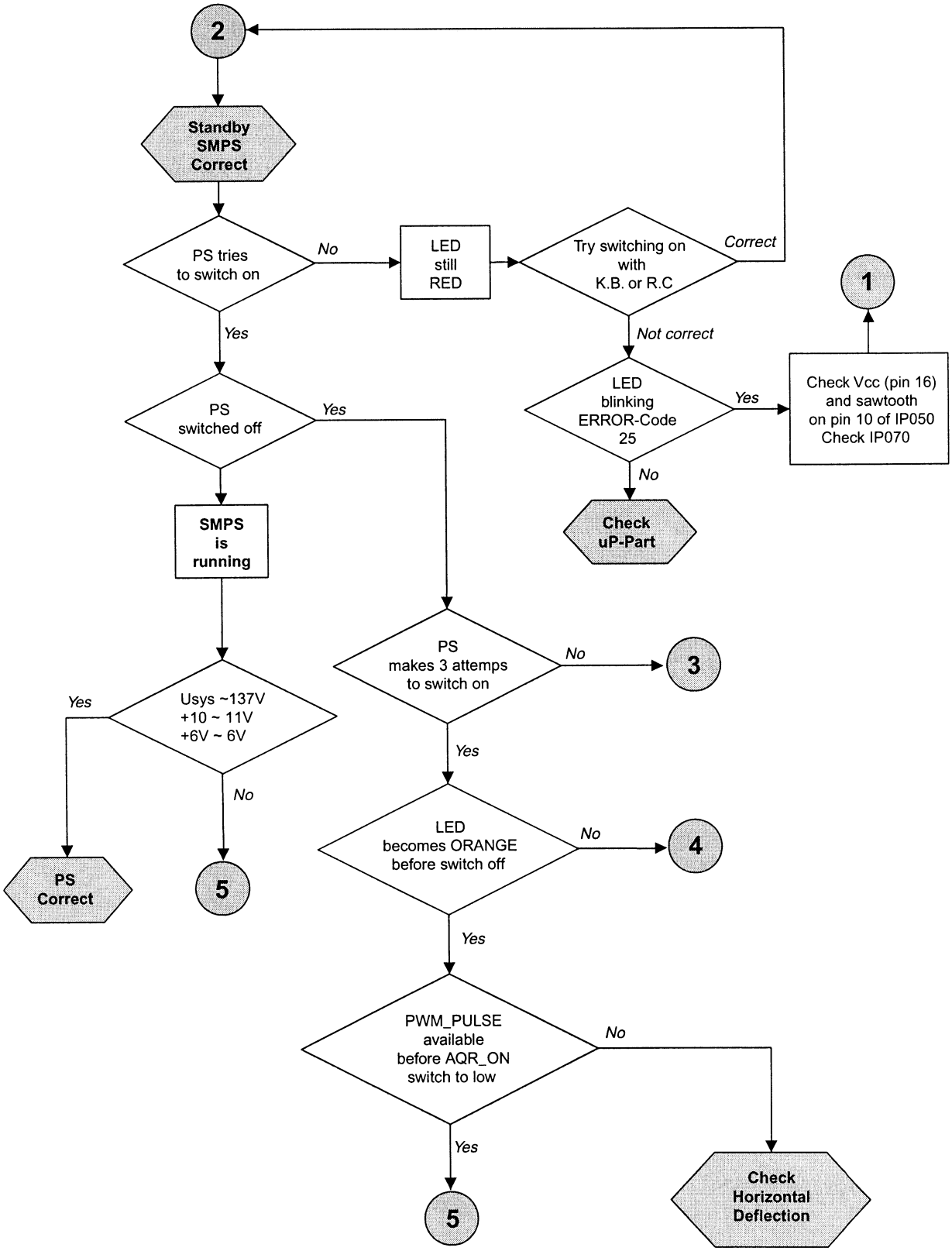

MAIN POWER SUPPLY CHECK

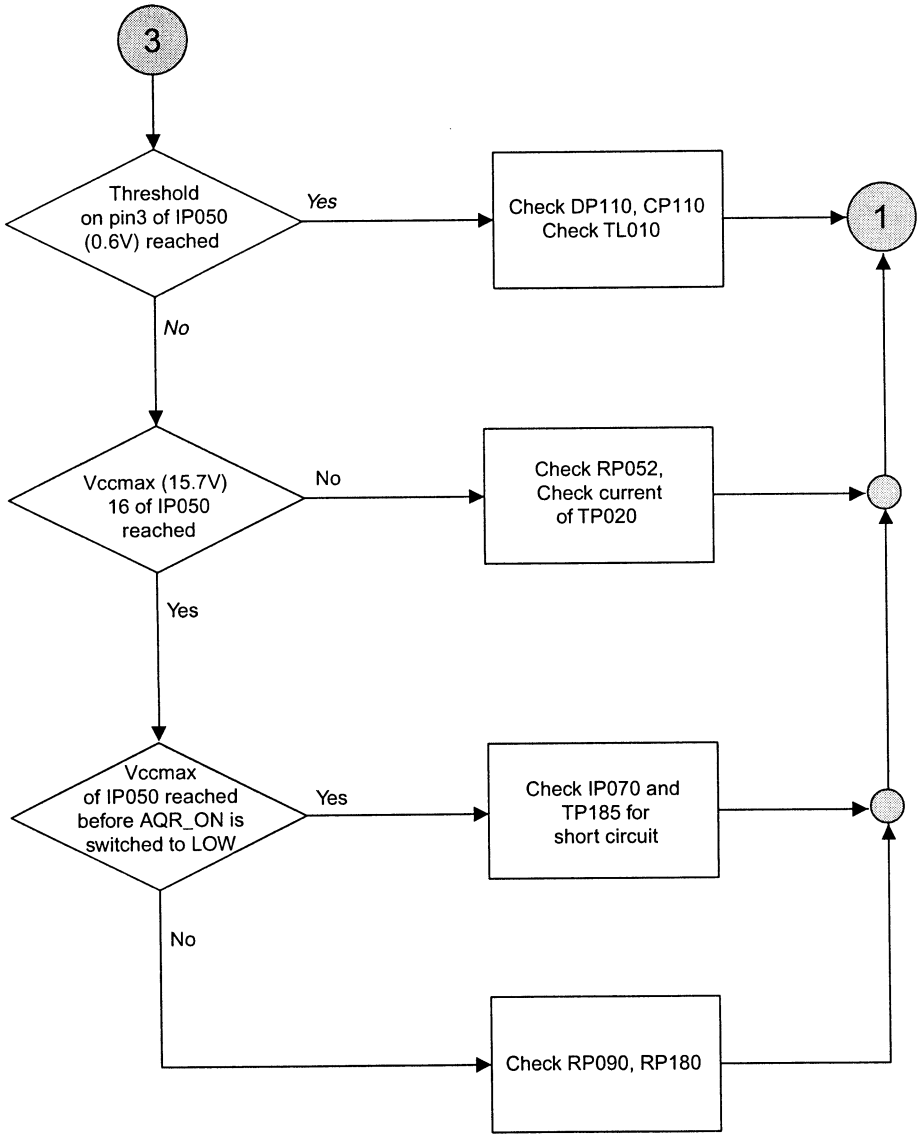

MAIN POWER SUPPLY CHECK

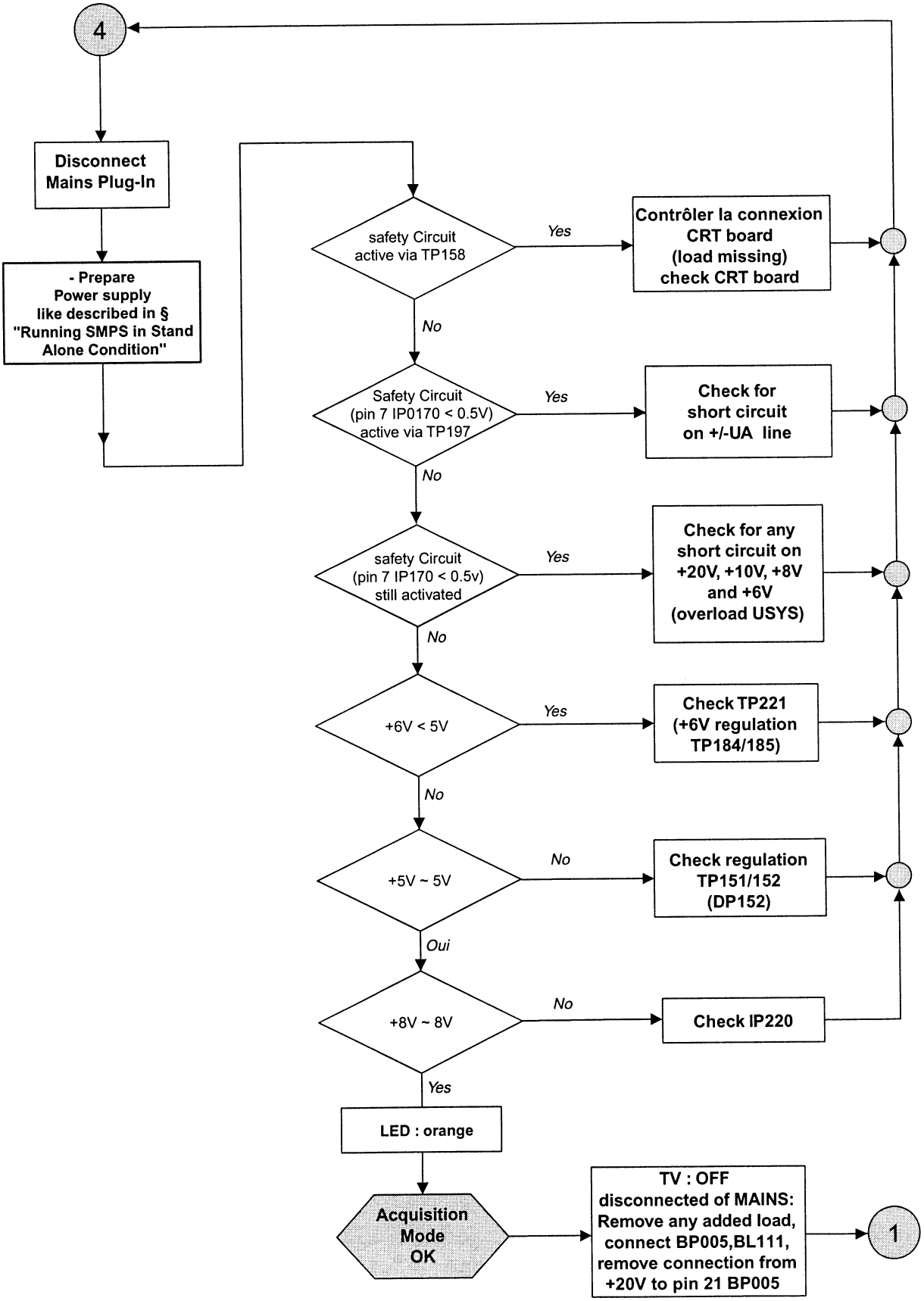

MAIN POWER SUPPLY CHECK

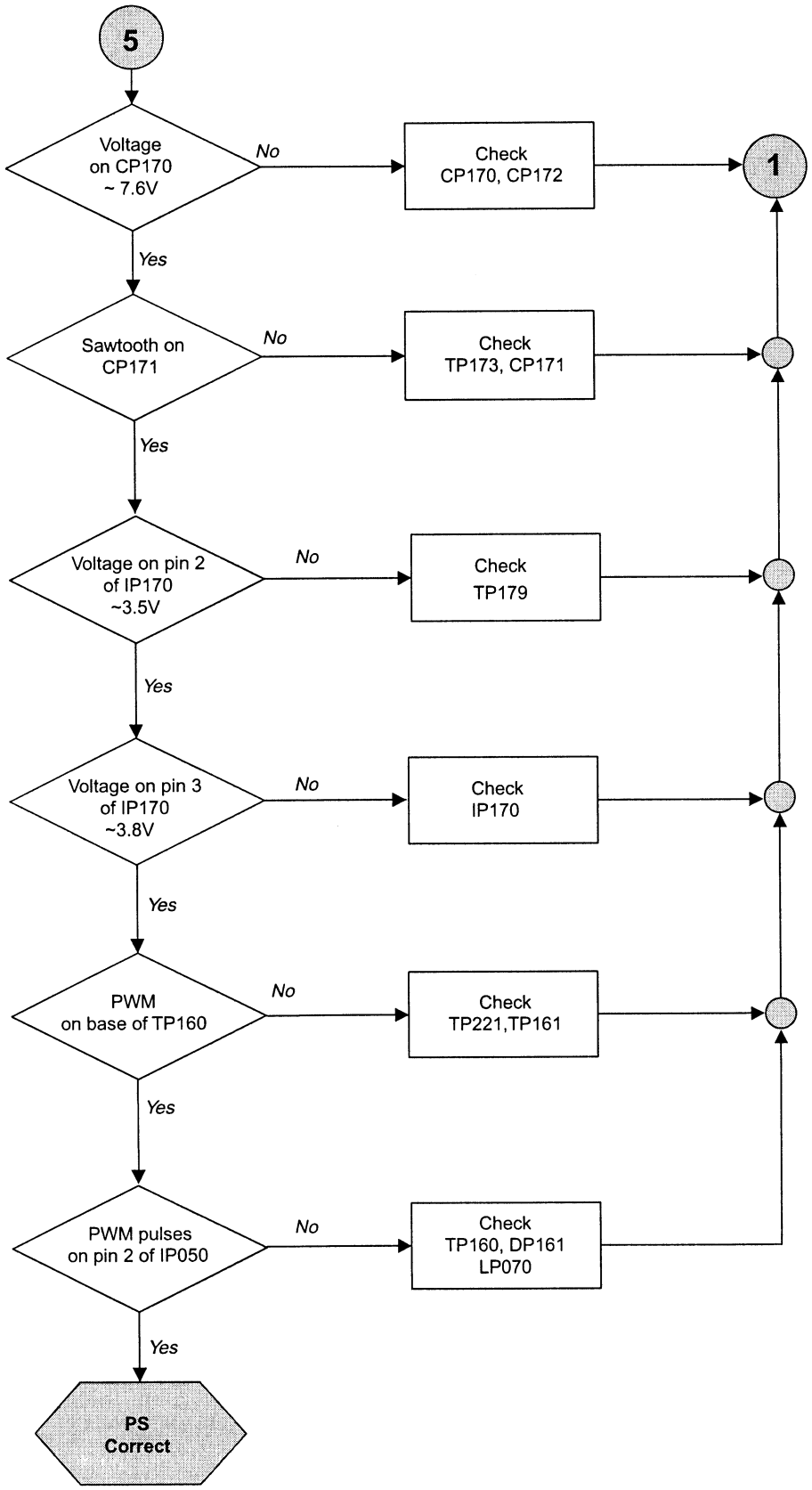

WIRING DIAGRAM - SCHEMA D'INTERCONNEXIONS - VERDRAHTUNGSPLAN - DIAGRAMMA DELLE INTERCONNESSIONI - ESQUEMA DE INTERCONEXIONES

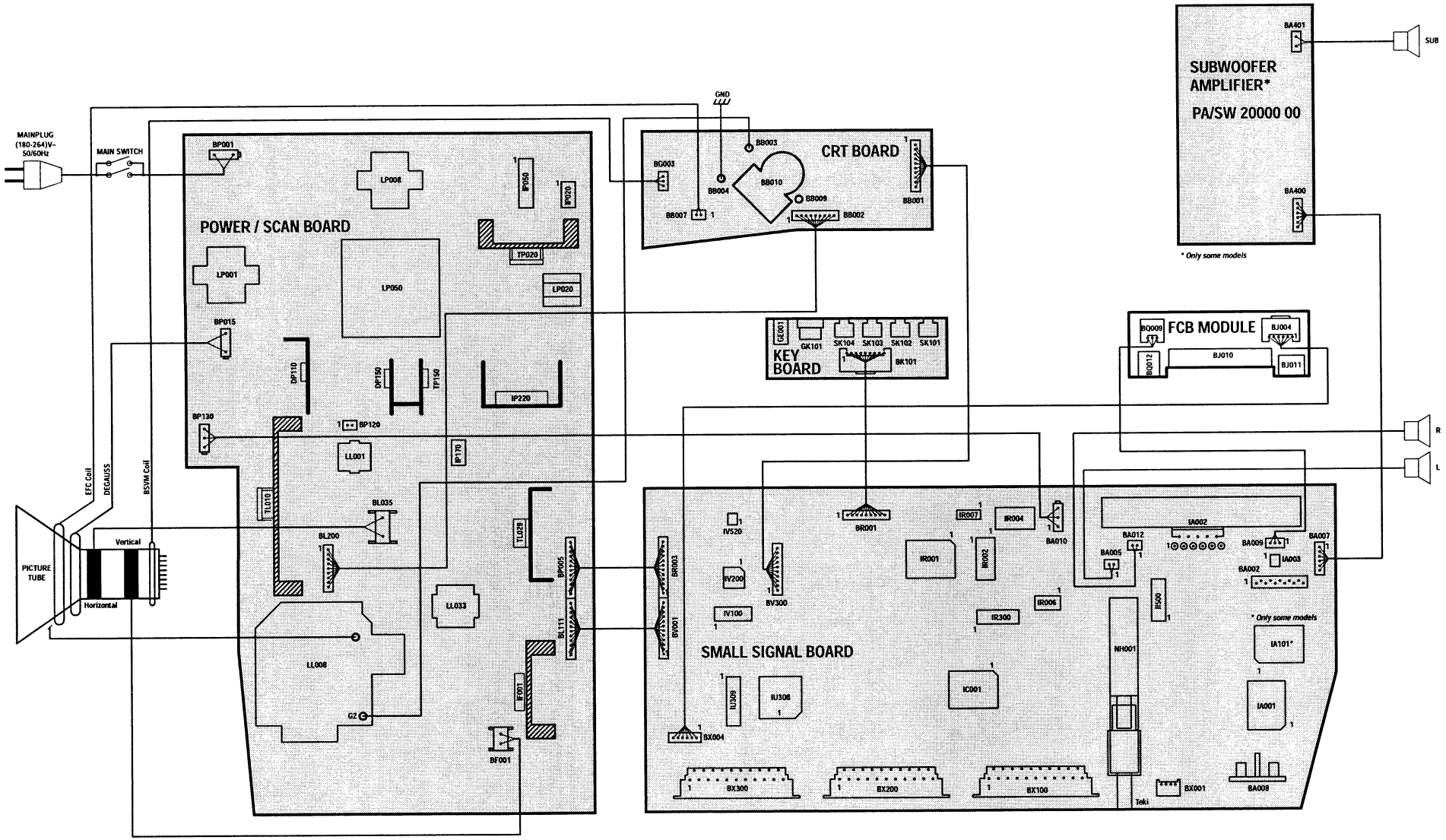

GENERAL BLOCK DIAGRAM - SYNOPTIQUE GÉNÉRAL - BLOCKSCHALTBILD ALLGEMEIN - SCHEMA A BLOCCHI GENERALE - ESQUEMA DE BLOQUES GENERAL

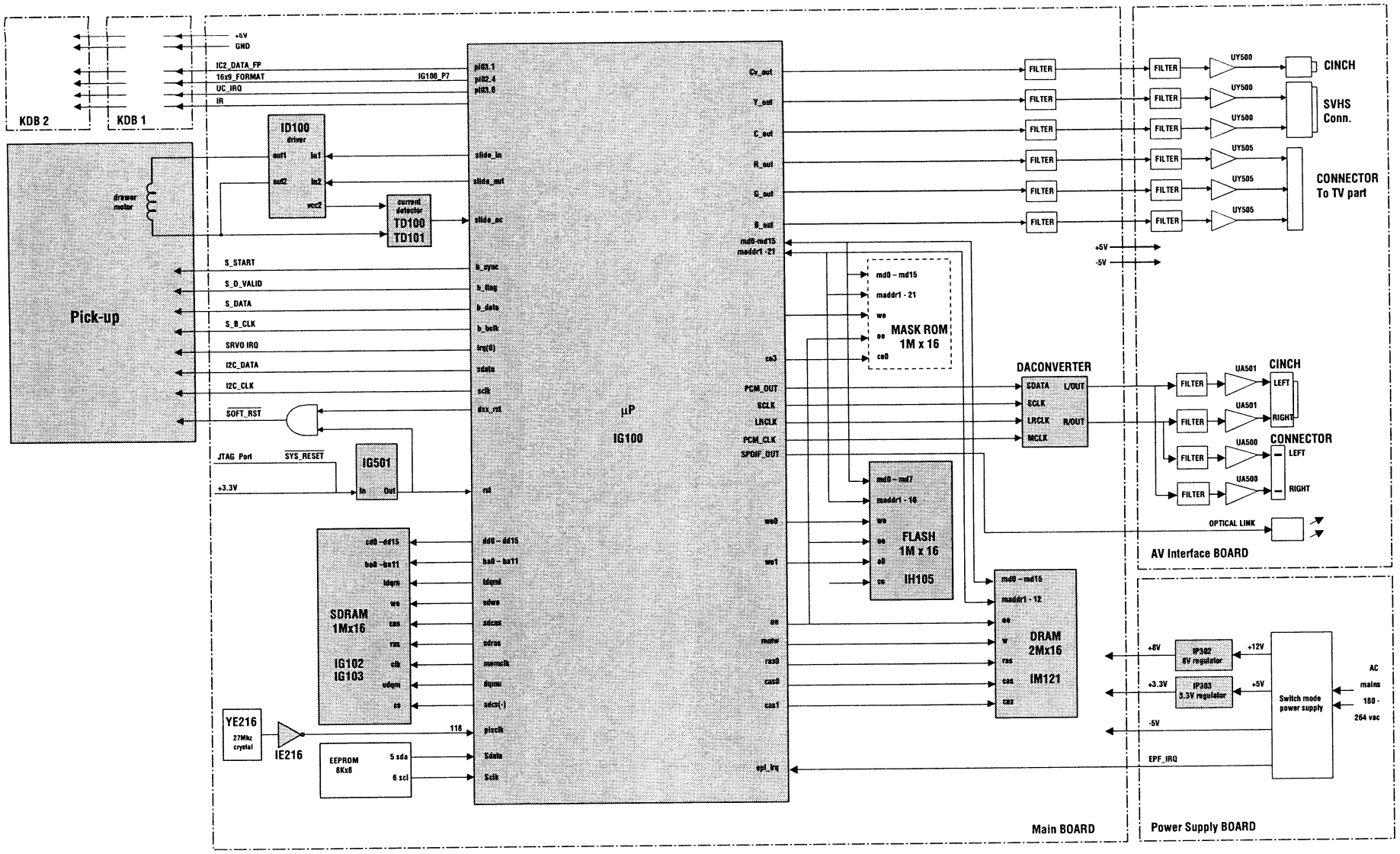

WIRING DIAGRAM - SCHEMA D'INTERCONNEXIONS - VERDRAHTUNGSPLAN - DIAGRAMMA DELLE INTERCONNESSIONI - ESQUEMA DE INTERCONEXIONES

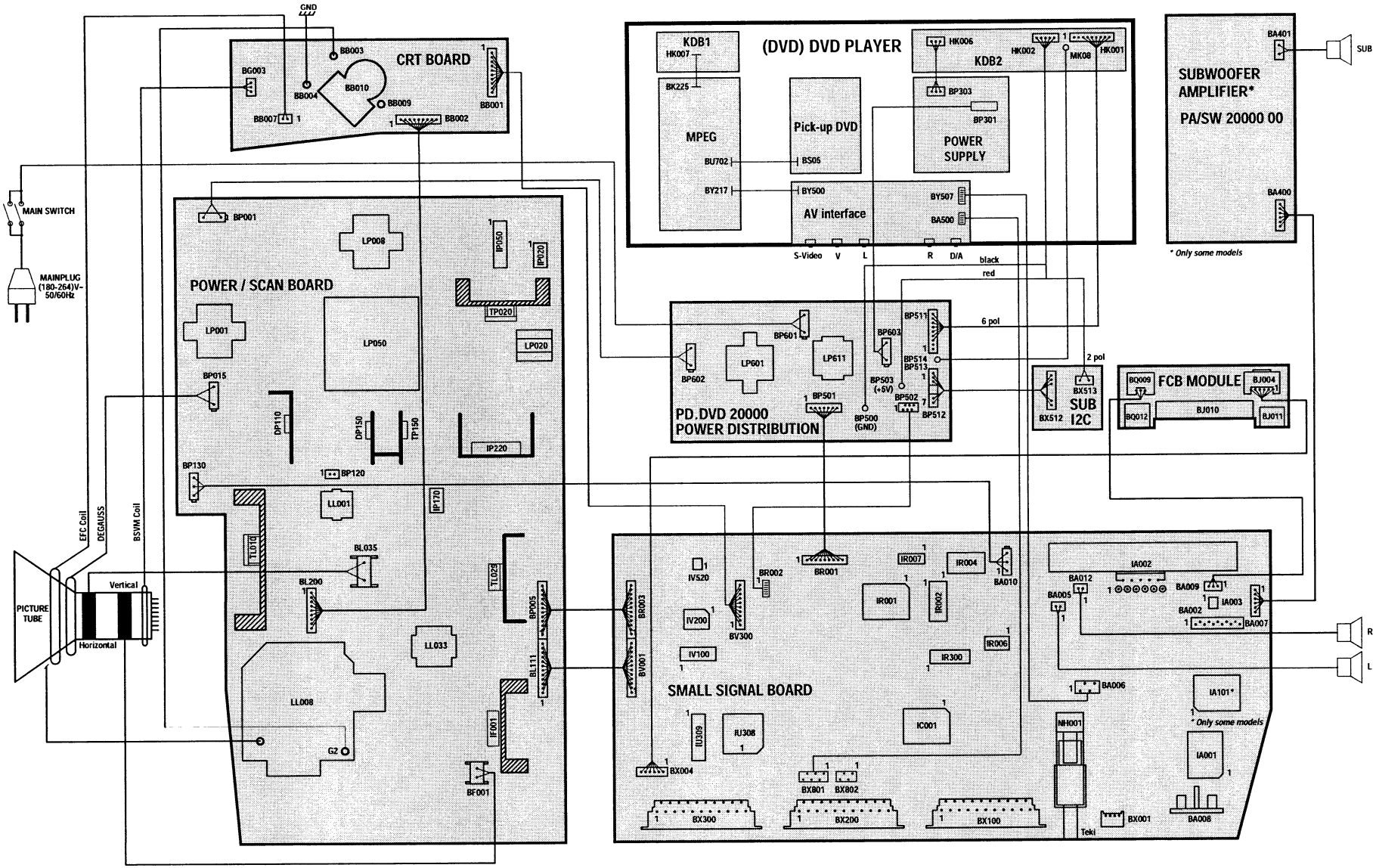

WIRING DIAGRAM - SCHÉMA D'INTERCONNEXIONS - VERDRAHTUNGSPLAN - DIAGRAMMA DELLE INTERCONNESSIONI - ESQUEMA DE INTERCONEXIONES

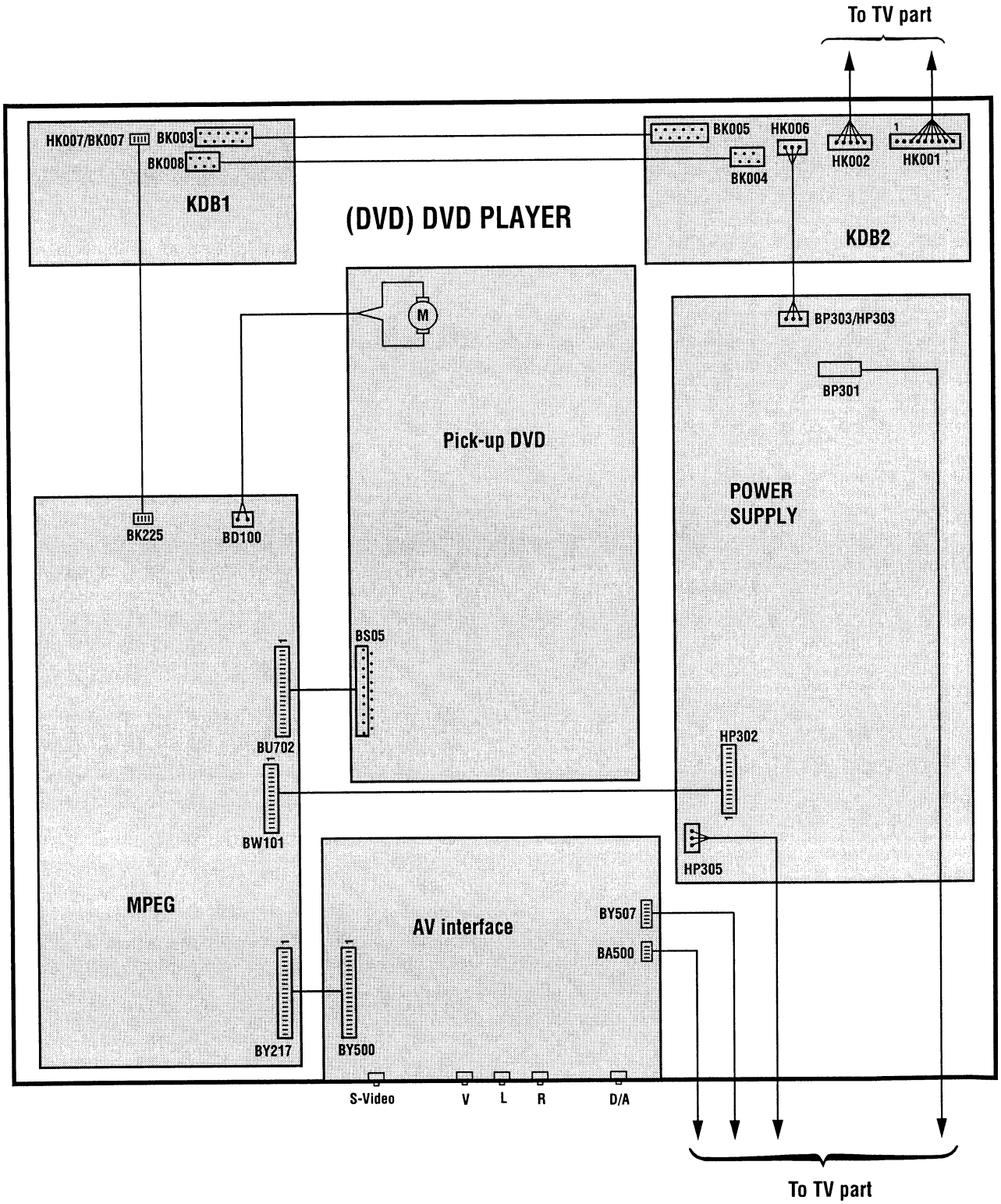

LIST OF ABBREVIATIONS - LISTE DES ABREVIATIONS - ABKÜRZUNGEN
LISTA DELLE ABBREVIAZIONI - LISTA DE ABREVIACIONES

- **ABL** AVERAGE BEAM CURRENT LIMITING
- **AQR_ON** DISABLE AQUISITION MODE REGUL. ENABLE PWM PULSE
- **AV1_8** PIN_8 DETECTOR
- **AV_LINK** AV_LINK DATAS VCR/TV
- **AV_R_ OUT** AUDIO RIGHT-OUT
- **AV_L_ OUT** AUDIO LEFT-OUT
- **AV_R_ IN** AUDIO RIGHT-IN
- **AV_L_ IN** AUDIO LEFT-IN
- **AV_B** BLUE SIGNAL FROM AV
- **AV_G** GREEN SIGNAL FROM AV
- **AV_R** RED SIGNAL FROM AV
- **AV_C_ IN** CHROMA-IN
- **AV_FB** FAST BLANK SIGNAL FROM AV SCART
- **AV_Y_ IN** VIDEO-IN
- **BEAM_INFO** BEAM CURRENT INFORMATION
- **BLKCURR** CUT OFF CURRENT
- **B_TXT** BLUE SIGNAL OUTPUT (TEXT)
- **B_OUT** BLUE SIGNAL TO VIDEO AMPLIFIER
- **BREATHING** COMPENSATE BREATHING PICTURE SIGNAL
- **BSVM** BEAM SCAN VELOCITY MODULATION
- **CNT1_20V** SAFETY SIGNAL TO INSURE A GOOD CONNECTION BETWEEN SIGNAL BOARD AND POWER BOARD (BV001- BL111)
- **CNT2_20V** SAFETY SIGNAL TO INSURE A GOOD CONNECTION BETWEEN SIGNAL BOARD AND POWER BOARD (BR003- BP005)
- **CRT** CATHODE RAY TUBE
- **CVBS** VIDEO
- **CVBS_LB_DET** LETTERBOX VIDEO DETECTION
- **DEFL_SAFETY** SAFETY INFORMATION FROM DEFLECTION
- **DEGAUSS** DEGAUSS SIGNAL
- **DPC** DYNAMIC PHASE COMPENSATION SIGNAL
- **EFC** EARTH FIELD CORRECTION
- **EHT** EXTREMELY HIGH TENSION
- **E.W_DRIVE** EAST - WEST DRIVE SIGNAL
- **EW_PROT** SAFETY SIGNAL FROM DIODE MODULATOR
- **FB DETEC** FAST BLANKING DETECT
- **FB_TXT** FAST BLANKING (TEXT)
- **FW ADJ.** FULL WHITE ADJUSTMENT
- **G_OUT** GREEN SIGNAL TO VIDEO AMPLIFIER
- **G_TXT** GREEN SIGNAL OUTPUT (TEXT)
- **H_DRIVE** DRIVE SIGNAL FOR HORIZONTAL DEFLECTION
- **HEATER** HEATER OUTPUT FROM THE DST TO CRT
- **H DEFL. PROT.** HORIZONTAL DEFLECTION PROTECTION
- **IIC-CL-1** I2C CLOCK BUS 1
- **IIC-CL-2** I2C CLOCK BUS 2
- **INF_POW_FAIL** POWER FAIL INFORMATION
- **IR** INFRARED RECEIVER
- **LDR** LED DISPLAY
- **MUTE** MUTES AUDIO AMPLFIERS
- **NMI** NON MASKABLE INTERRUPT
- **PAN_SWITCH** SIGNAL FOR PANORAMA CIRCUIT
- **PHI2_REF** PHI2 REFERENCE SIGNAL
- **PIF** PICTURE IF SIGNAL
- **PKS** PEAK SENSING
- **PO** POWER ON
- **PWM** PULSE WIDTH MODULATION
- **RES_MSP** MSP RESET
- **RESET** RESET TO MICROPROCESSOR
- **ROTATION** OUTPUT OF EARTH FIELD CORRECTION STAGE
- **R_OUT** RED SIGNAL TO VIDEO AMPLIFIER
- **R_TXT** RED SIGNAL OUTPUT (TEXT)
- **PIF** PICTURE IF SIGNAL
- **SIF** SOUND IF SIGNAL
- **SSC** SUPER SAND CASTLE
- **SSC_V_GUARD** SAFETY DATA GENERATED BY THE VERTICAL AMPLIFIER TDA8177F
- **TRAP_INFO** BG/L,L',D/K K' I SWITCH
- **+USYS** SYSTEM VOLTAGE
- **+/- UA** SOUND VOLTAGE
- **+UVERT** POSITIVE SUPPLY VERTICAL VOLTAGE
- **-UVERT** NEGATIVE SUPPLY VERTICAL VOLTAGE
- **+UVFB** POSITIVE SUPPLY VOLTAGE FOR VERTICAL POWER STAGE
- **+UVIDEO** VIDEO VOLTAGE FOR THE CRT BOARD
- **U_IN** U FROM CHROMA DECODER
- **V_IN** V FROM CHROMA DECODER
- **V_DRIVE** VERTICAL DEFLECTION DRIVE SIGNAL
- **Y_IN** Y FROM CHROMA DECODER
- **5 V** 5V POWER SUPPLY SIGNAL BOARD
- **6 V** 6V POWER SUPPLY
- **5V_UP** MICROPROCESSOR SUPPLY VOLTAGE
- **10 V** 10V POWER SUPPLY
- **8 V** 8V SUPPLY SIGNAL BOARD
- **8V_STBY** 8V STANDBY
- **40V** SUPPLY VOLTAGE TUNER
- **20V** SUPPLY VOLTAGE HORIZONTAL DRIVER AND BSVM CRT

INTEGRATED CIRCUITS AND TRANSISTORS OUTLINE - CIRCUITS INTEGRES ET TRANSISTORS
INTEGRIERTE SCHALTUNGEN UND TRANSISTOREN - CIRCUITI INTEGRATI TRANSISTOR
CIRCUITOS INTEGRADOS Y TRANSISTORES

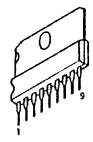

TDA 8139
TDA6111Q
TEA5101B

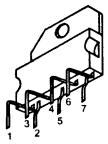

TDA 8177

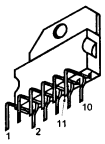

TDA7269

4N25TV

K324PG
M24C32BNI
MC7805CT
MC7812CT
MC33076/P1
ST24C04-B1
TDA4605
X24164

TL084C

STV2145

TEA6415C

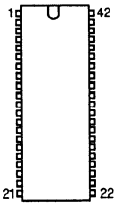

TDA9811

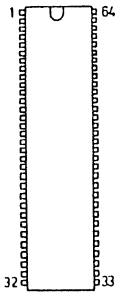

MPS3400
MPS3410

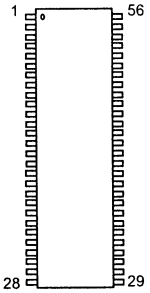

STV2040
STV2162

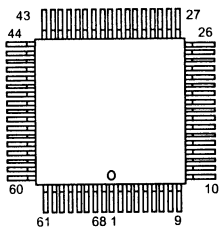

MS3400C-PS
MSP3410D-PS
ST90R92

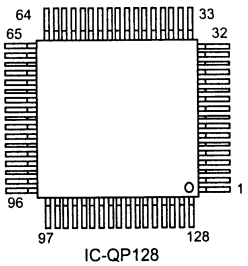

IC-QP128

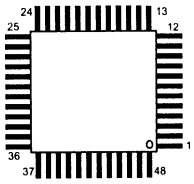

MC141627

BCR141- BC846B
BC 847B-BC856B
BC857B-BF 799
BC 848 A/B/C

BC368
BC639
BF421
BF 422
BF423

BC327
BC 337
BC547B
BC557B
BC 548B
BC 558B

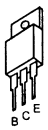

2SA1837
2SC4793
2SC3675
BD 241
TIP122

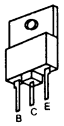

BUL810TH
BUV48CFITH16
BW93CFI
BW94CFI
ON4977

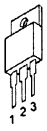

7805
7812
L7912CV

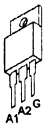

BT806 -600C

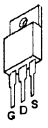

STP6 NA60F1
STP22NE03L
2SK1460

TR03-400T

INTEGRATED CIRCUITS BLOCK DIAGRAMS - SYNOPTIQUES INTERNES DES CIRCUITS INTEGRES - INTEGRIERTE SCHALTUNGEN BLOCKSCHALTBILDER
SCHEMA A BLOCCHI DEL CIRCUITI INTEGRATI - VISTA INTERNA DE LOS CIRCUITOS INTEGRADOS

POWER / SCAN BOARD - PLATINE ALIMENTATION / BALAYAGE -NETZTEIL- UND ABLENKPLATINE - PIASTRA DEFLESSIONE / ALIMENTAZIONE - PLACA ALIMENTACIÓN / BARRIDOS

IP020 - VIPER20DIP

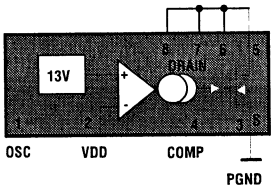

IF001 - TDA8177F

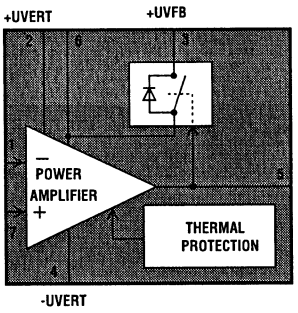

IP050 - TEA2262

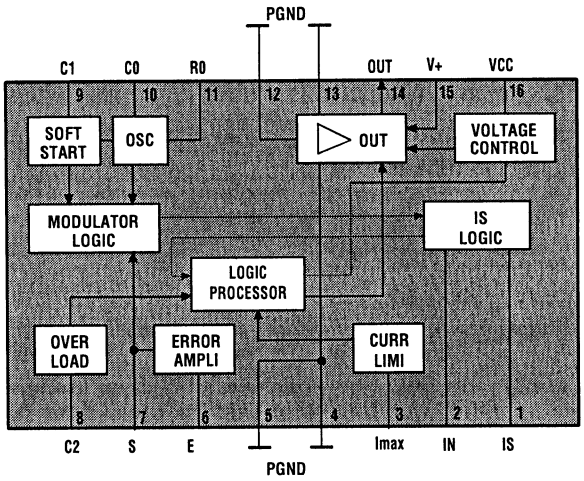

IP220 - TDA8139

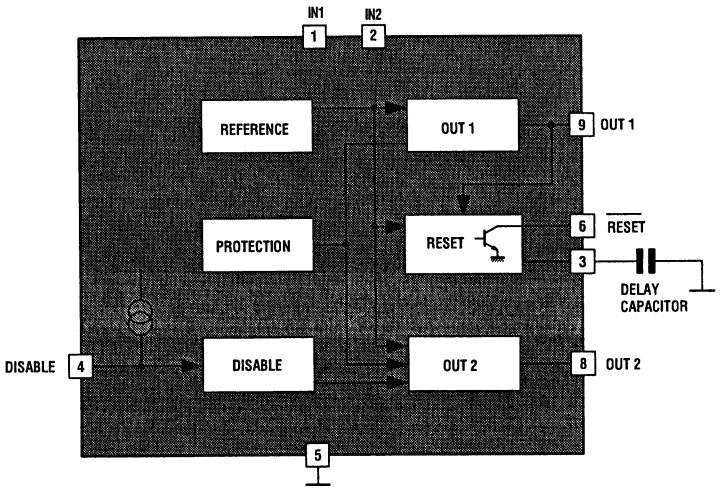

INTEGRATED CIRCUITS BLOCK DIAGRAMS - SYNOPTIQUES INTERNES DES CIRCUITS INTEGRES - INTEGRIERTE SCHALTUNGEN BLOCKSCHALTBILDER
SCHEMA A BLOCCHI DEL CIRCUITI INTEGRATI - VISTA INTERNA DE LOS CIRCUITOS INTEGRADOS

SMALL SIGNAL BOARD - PLATINE PETITS SIGNAUX - SIGNAL-PLATINE - PIASTRA PICCOLI SEGNALI - PLACA PEQUEÑA SEÑAL

IC001 - TDA9321H

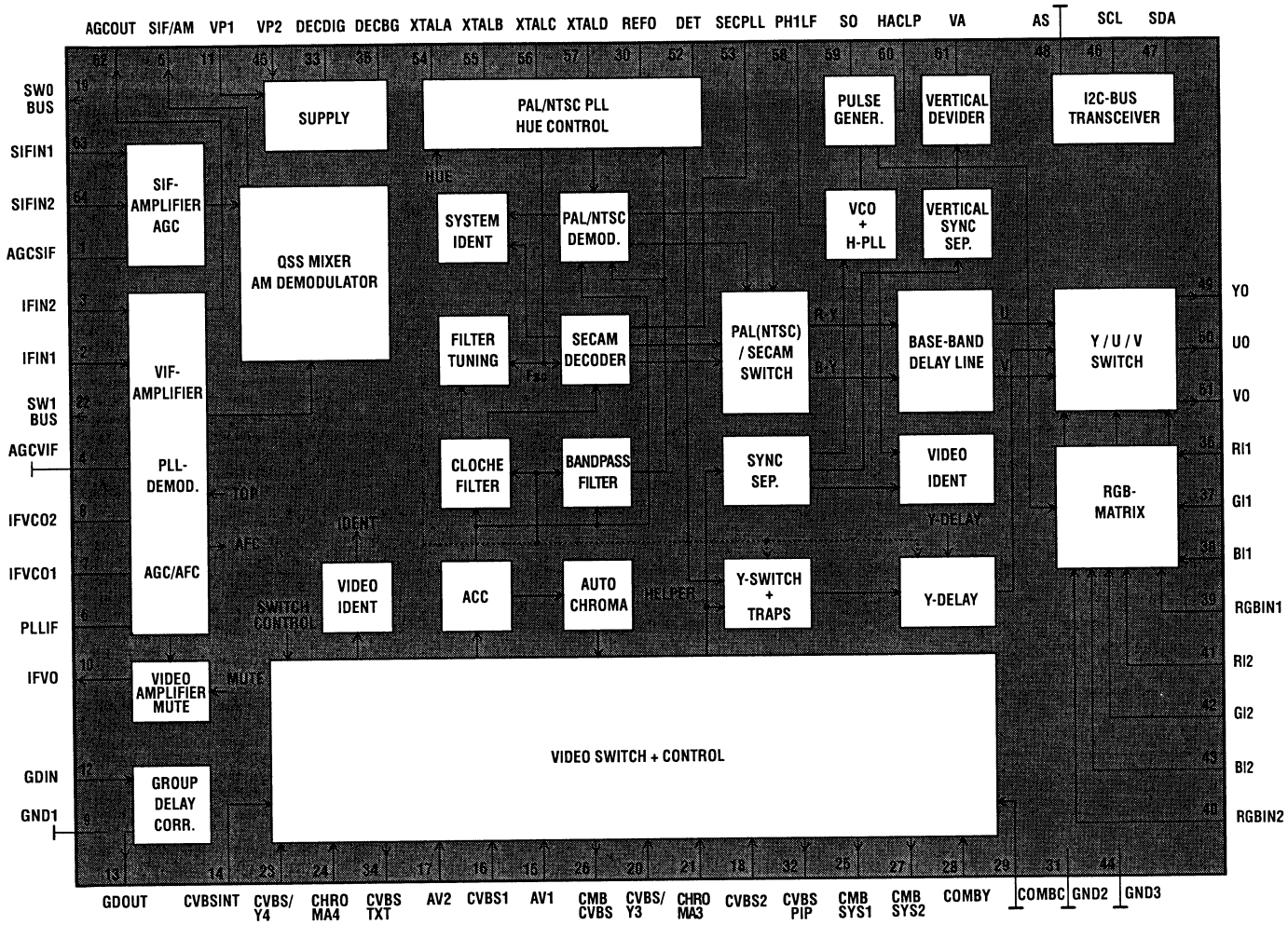

IU308 - DMU0

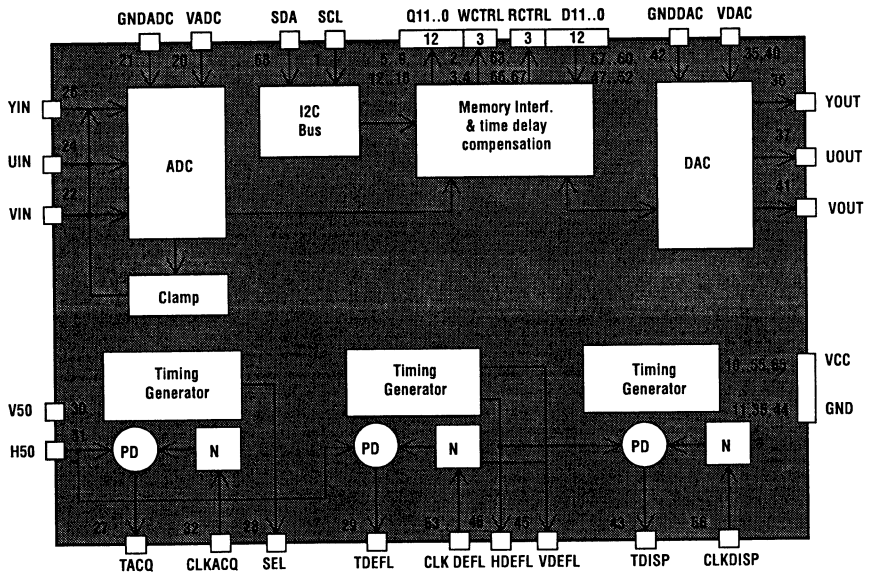

INTEGRATED CIRCUITS BLOCK DIAGRAMS - SYNOPTIQUES INTERNES DES CIRCUITS INTEGRES - INTEGRIERTE SCHALTUNGEN BLOCKSCHALTBILDER
SCHEMA A BLOCCHI DEL CIRCUITI INTEGRATI - VISTA INTERNA DE LOS CIRCUITOS INTEGRADOS

SMALL SIGNAL BOARD - PLATINE PETITS SIGNAUX - SIGNAL-PLATINE - PIASTRA PICCOLI SEGNALI - PLACA PEQUEÑA SEÑAL

IV200 - TDA9330H

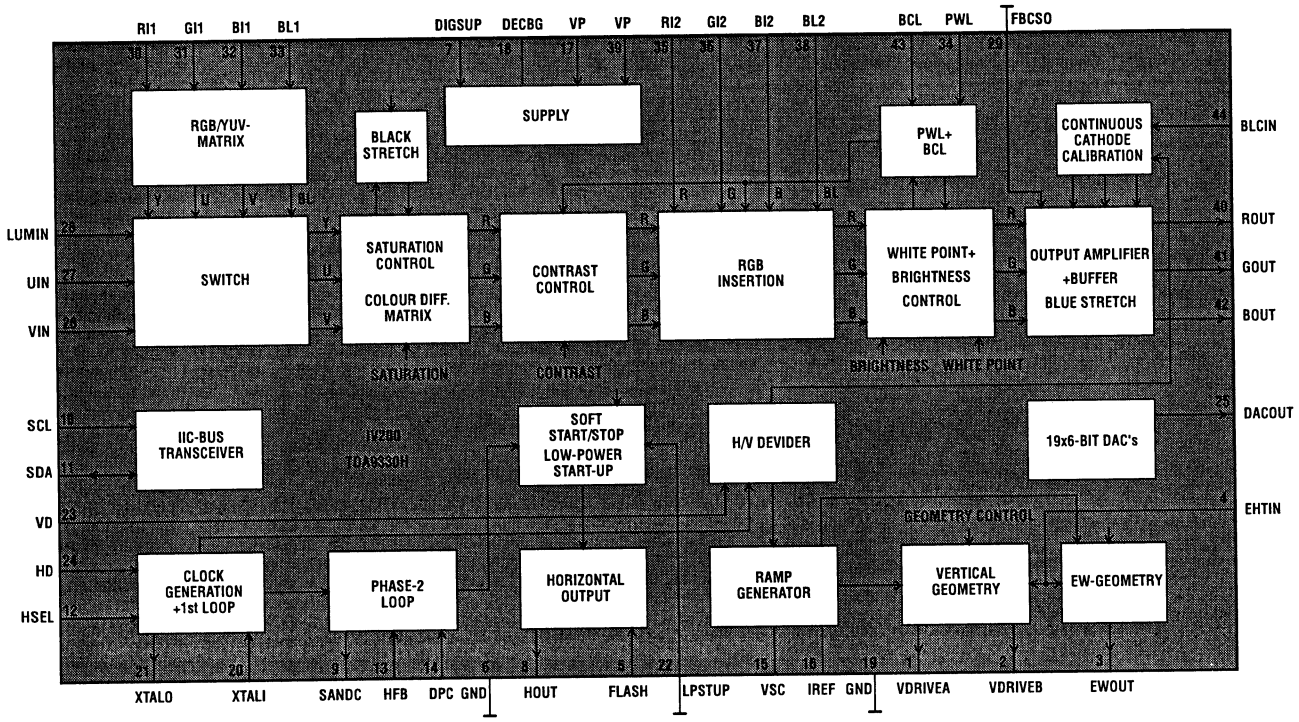

IV100 - TDA9178

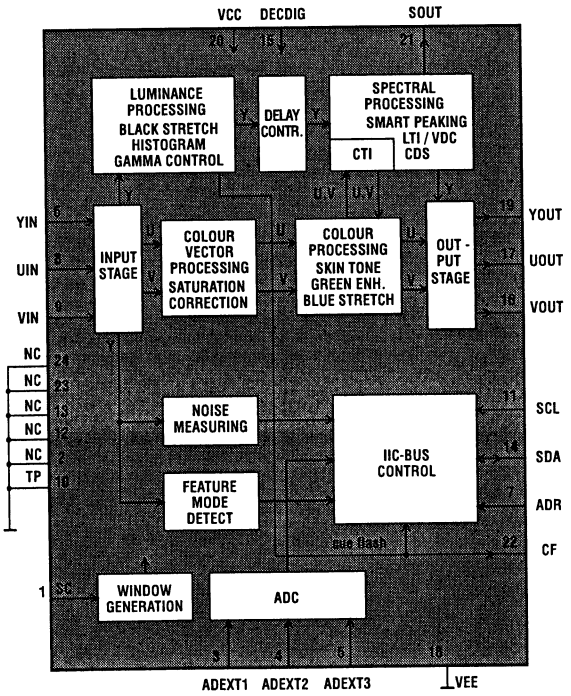

INTEGRATED CIRCUITS BLOCK DIAGRAMS - SYNOPTIQUES INTERNES DES CIRCUITS INTEGRES - INTEGRIERTE SCHALTUNGEN BLOCKSCHALTBILDER
SCHEMA A BLOCCHI DEL CIRCUITI INTEGRATI - VISTA INTERNA DE LOS CIRCUITOS INTEGRADOS

SMALL SIGNAL BOARD - PLATINE PETITS SIGNAUX - SIGNAL-PLATINE - PIASTRA PICCOLI SEGNALI - PLACA PEQUEÑA SEÑAL

IA001 - MSP 34X0G

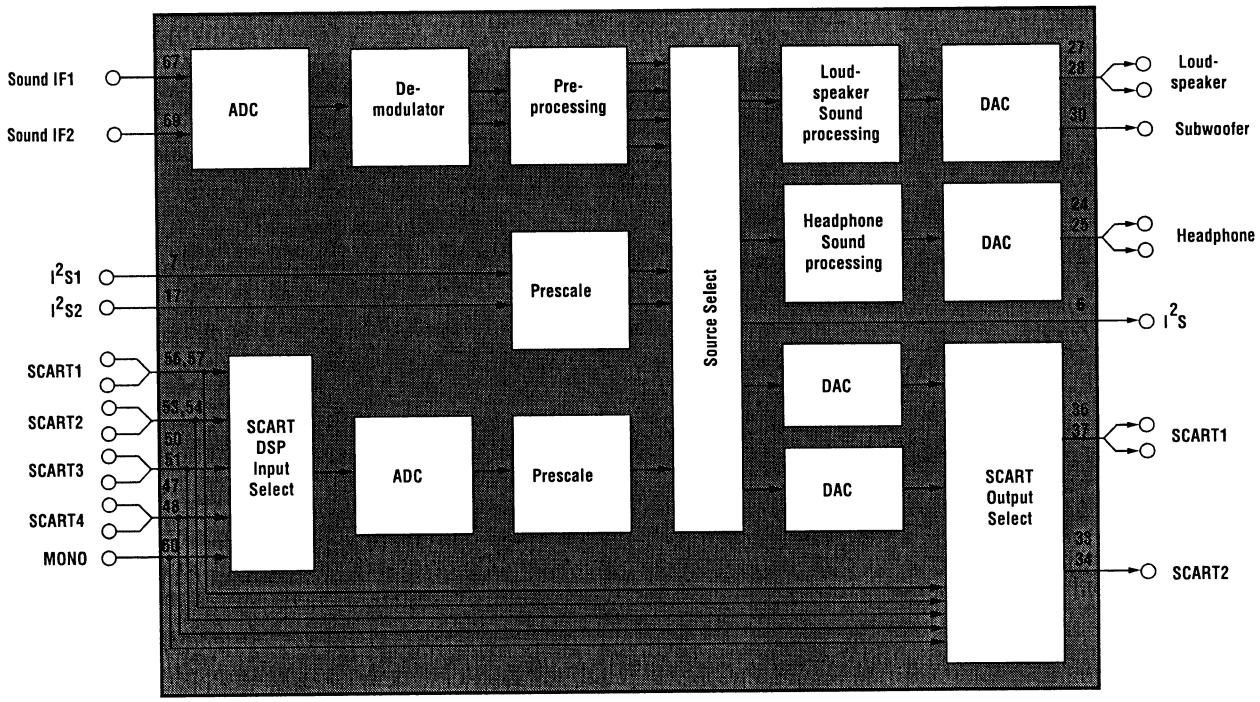

VIDEO PART - PARTIE VIDEO - VIDEO-SIGNALVERARBEITUNG - ELABORAZIONE VIDEO - TRATAMENTO VIDEO

IB001 - TDA6108JF

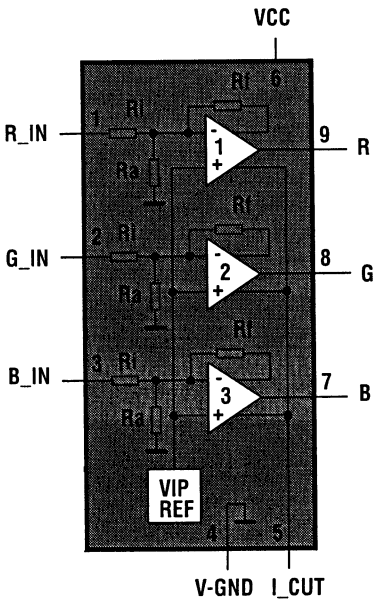

KEYBOARD CIRCUIT BOARDS - CIRCUITS IMPRIMES PLATINES COMMANDES - LEITERPLATTE BEDIENTEIL - PIASTRE TASTIERA - PLATINAS MANDOS

COMPONENT SIDE - COTÉ COMPOSANTS - BESTÜCKUNGSSEITE - LATO COMPONENTI - LADO COMPONENTES

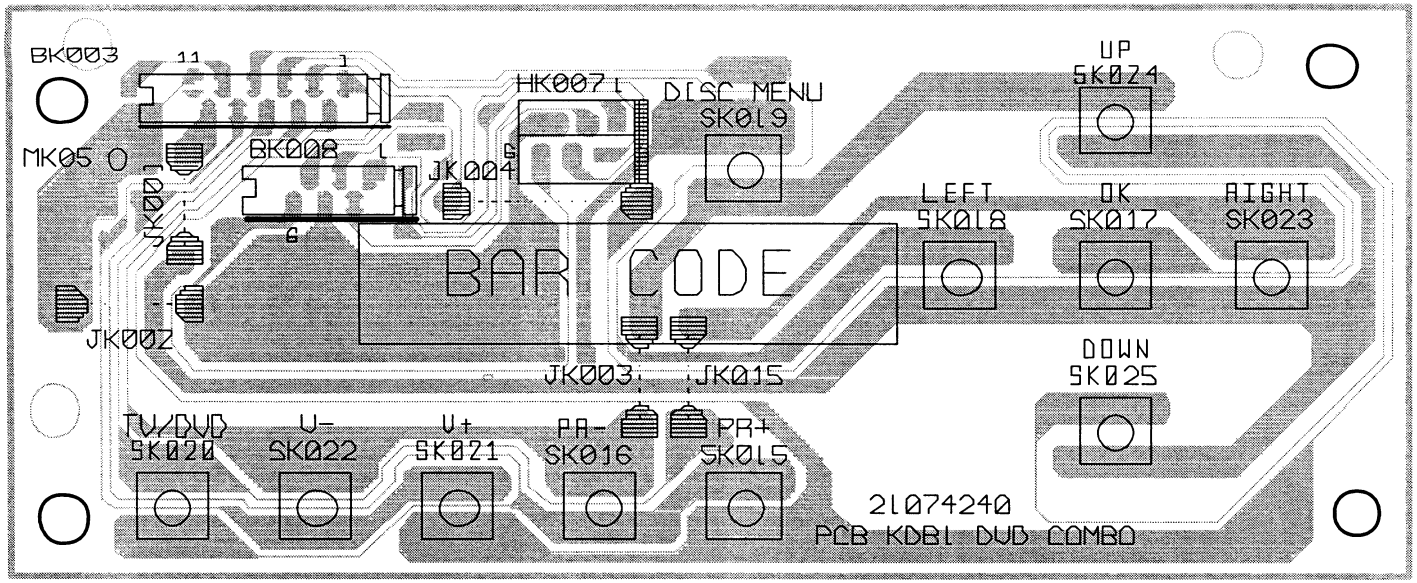

SOLDER SIDE - COTÉ CUIVRE - LÖTSEITE - LATO SALDATURE - LADO DEL COBRE

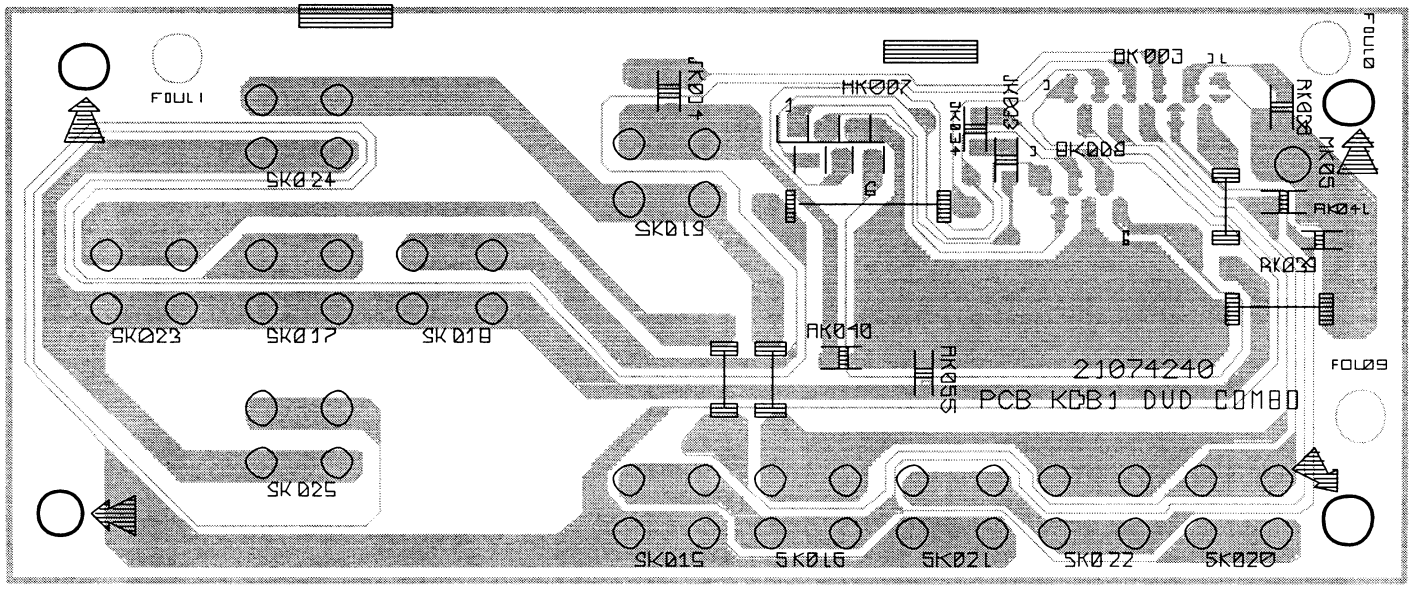

KEYBOARD CIRCUIT BOARDS - CIRCUITS IMPRIMES PLATINES COMMANDES - LEITERPLATTE BEDIENTEIL - PIASTRE TASTIERA - PLATINAS MANDOS

COMPONENT SIDE - COTÉ COMPOSANTS - BESTÜCKUNGSSEITE - LATO COMPONENTI - LADO COMPONENTES

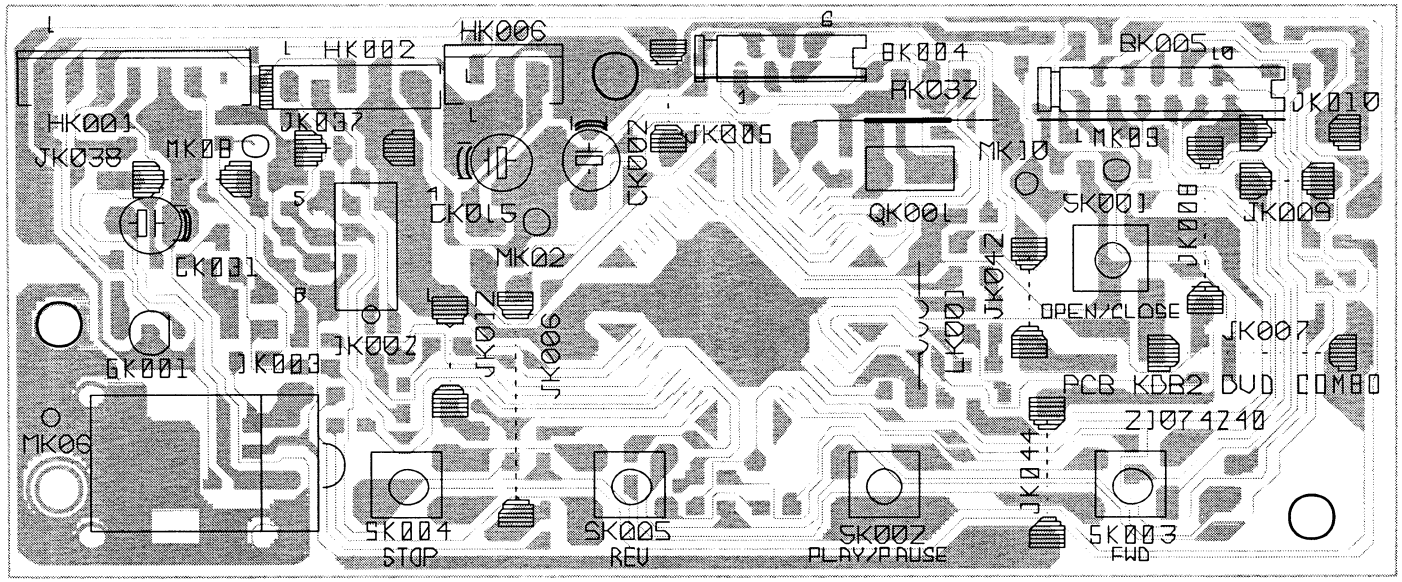

SOLDER SIDE - COTÉ CUIVRE - LÖTSEITE - LATO SALDATURE - LADO DEL COBRE

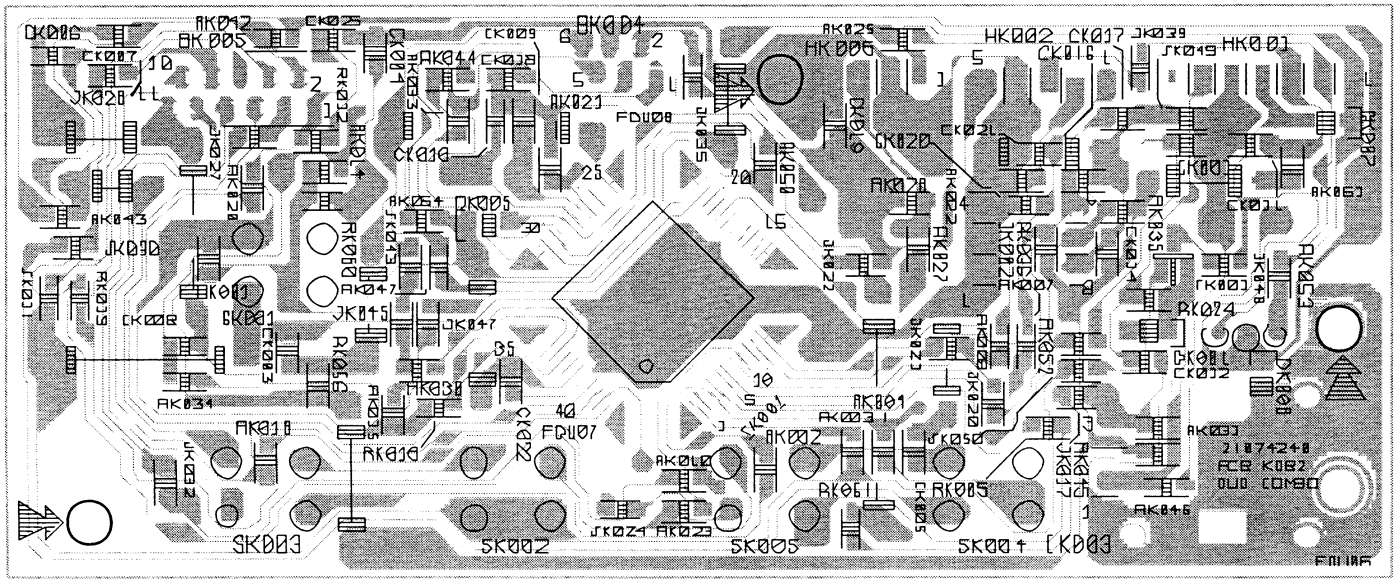

POWER / SCAN BOARD - PLATINE ALIMENTATION / BALAYAGE - NETZTEIL- UND ABLENKPLATINE - PIASTRA DEFLESSIONE / ALIMENTAZIONE - PLACA ALIMENTACIÓN / BARRIDOS

COMPONENT SIDE - COTE COMPOSANTS - BESTÜCKUNGSSEITE - LATO COMPONENTI - LADO COMPONENTES

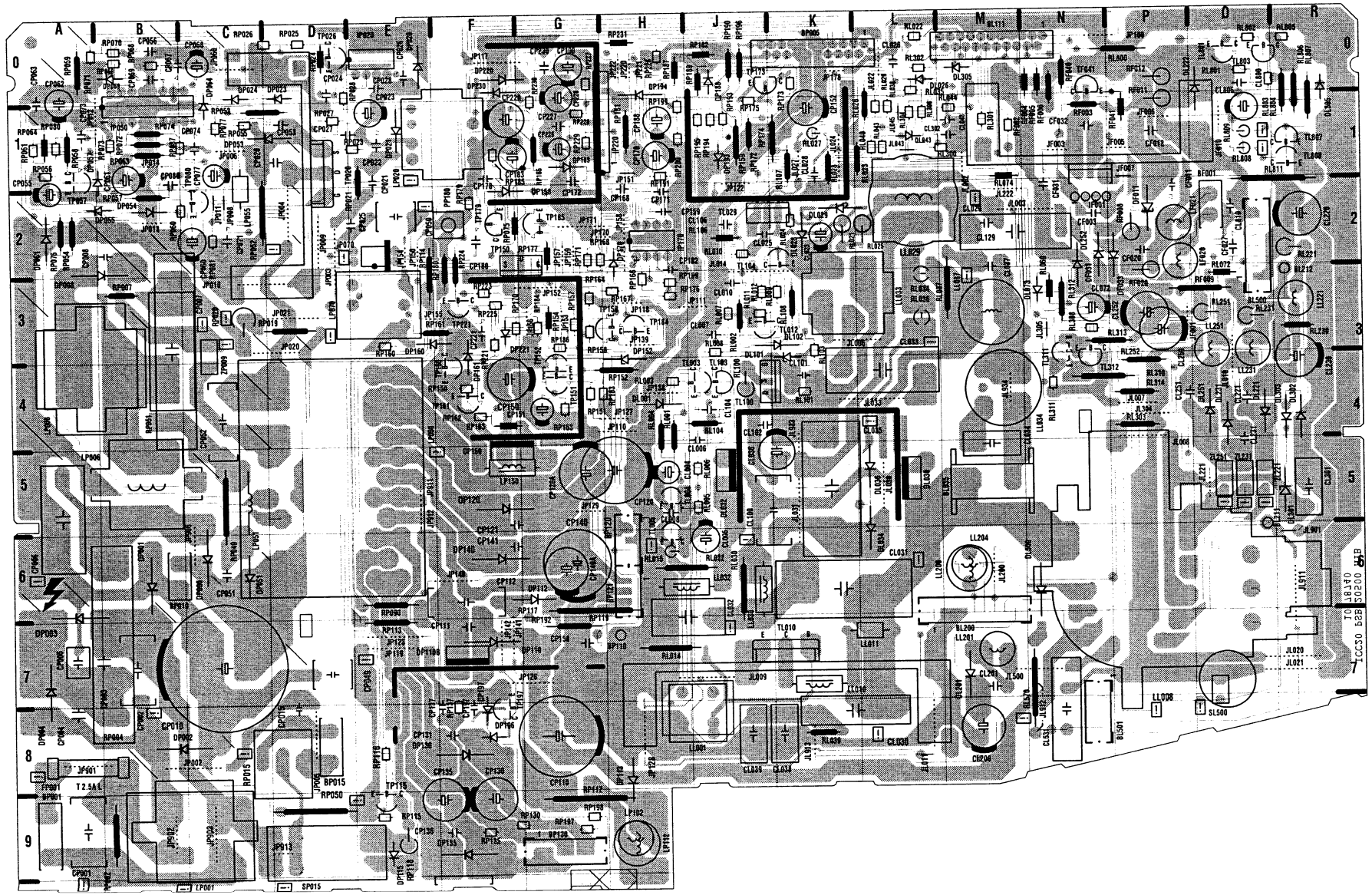

POWER / SCAN BOARD - PLATINE ALIMENTATION / BALAYAGE - NETZTEIL- UND ABLENKPLATINE - PI/

COMPONENT•SIDE•-•COTE•COMPOSANTS•-•BESTÜCKUNGSSEITE•-•LATO•COMPONENTI•-•LADO•COMPONENTES

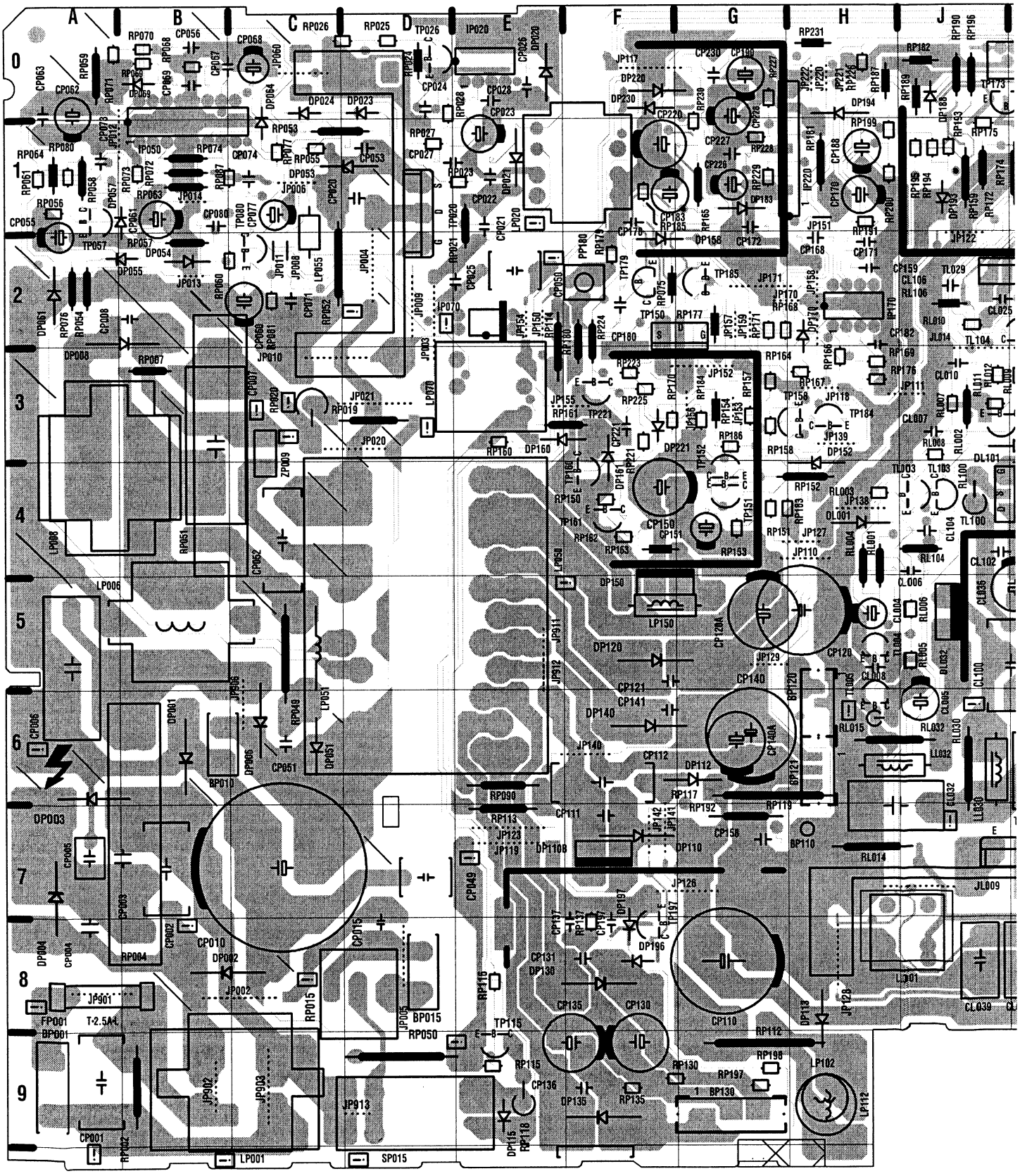

ıTINE - PIASTRA DEFLESSIONE / ALIMENTAZIONE - PLACA ALIMENTACIÓN / BARRIDOS

S

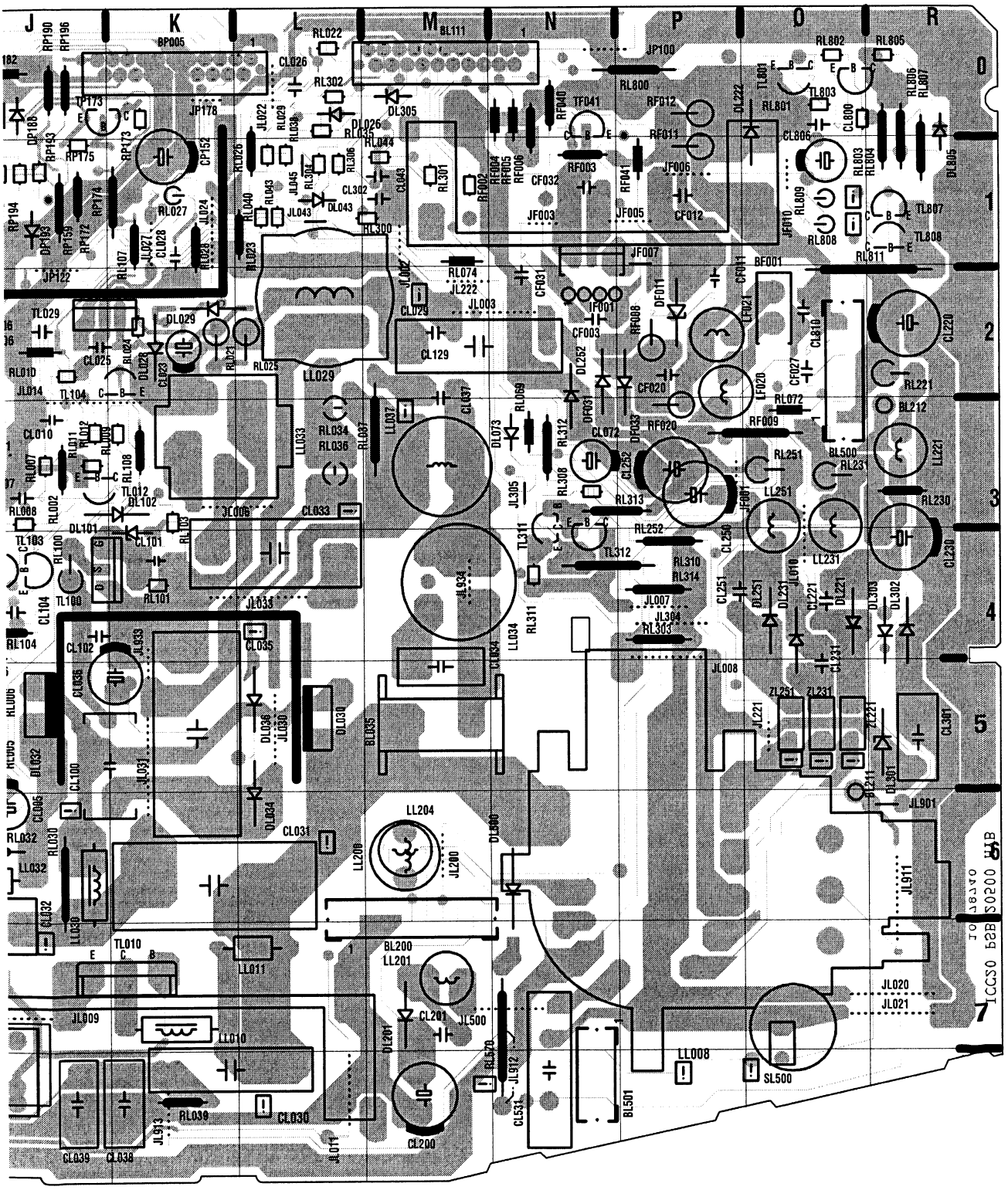

POWER / SCAN BOARD - PLATINE ALIMENTATION / BALAYAGE - NETZTEIL- UND ABLENKPLATINE

SOLDER SIDE - CÔTE SOUDURES - LÖTSEITE - LATO SALDATURE - LADO SOLDADURAS

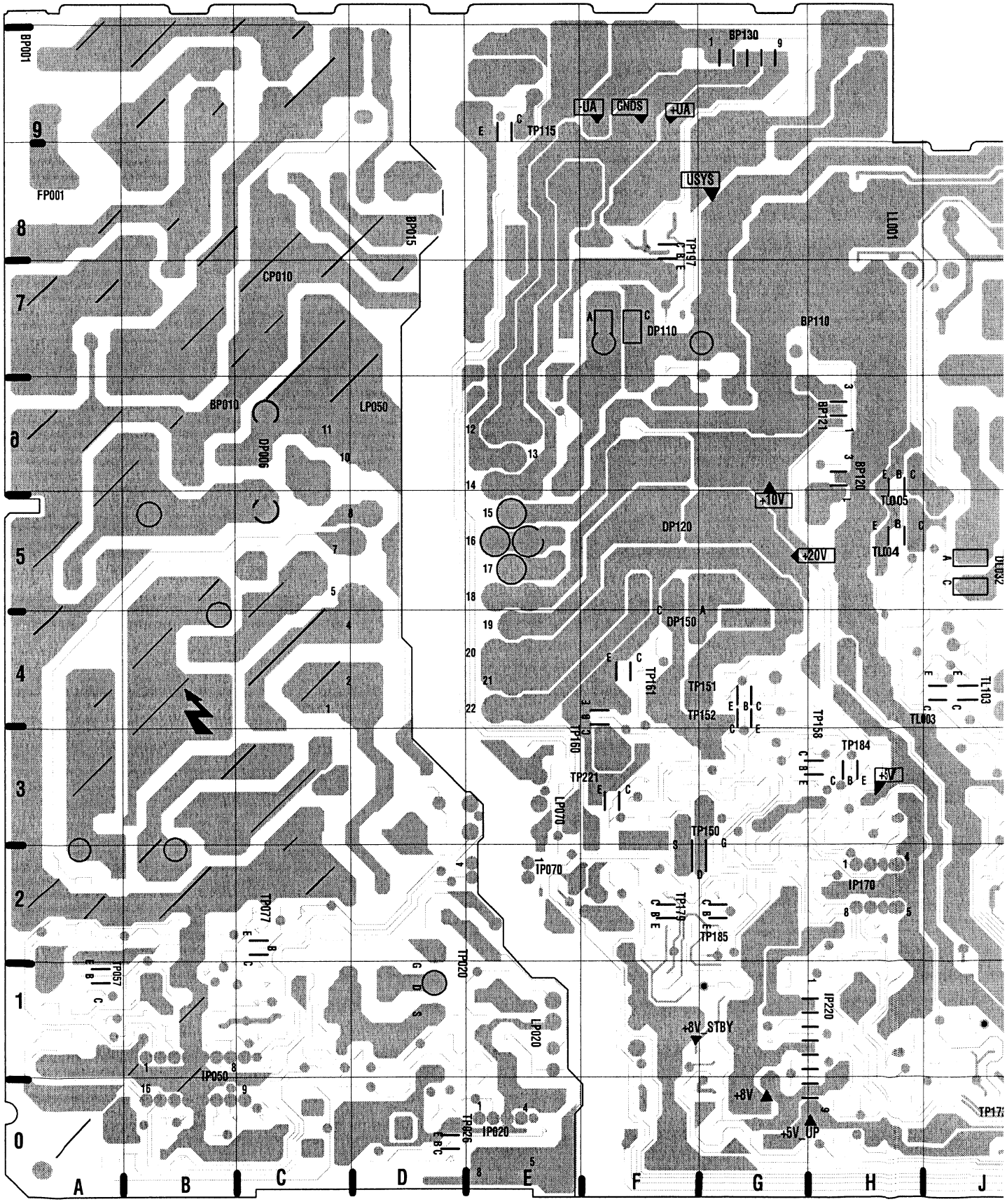

PLATINE - PIASTRA DEFLESSIONE / ALIMENTAZIONE - PLACA ALIMENTACIÓN / BARRIDOS

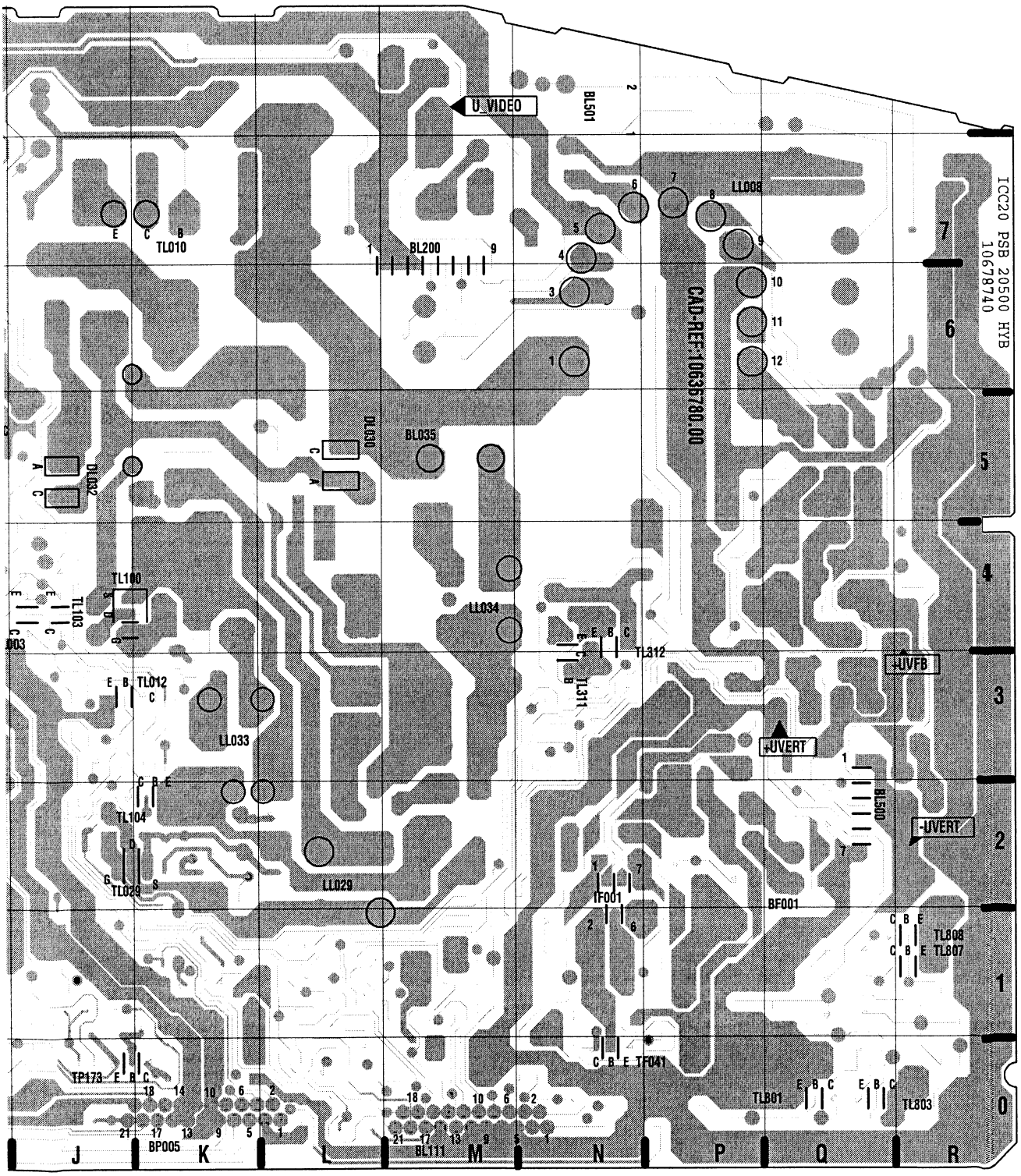

POWER SUPPLY CIRCUIT BOARD - CIRCUIT IMPRIME DE L'ALIMENTATION - LEITERPLATTE NETZTEIL - PIASTRA DEI CIRCUITI DI ALIMENTAZIONE - PLATINA ALIMENTACIÓN

COMPONENT SIDE - COTÉ COMPOSANTS - BESTÜCKUNGSSEITE - LATO COMPONENTI - LADO COMPONENTES

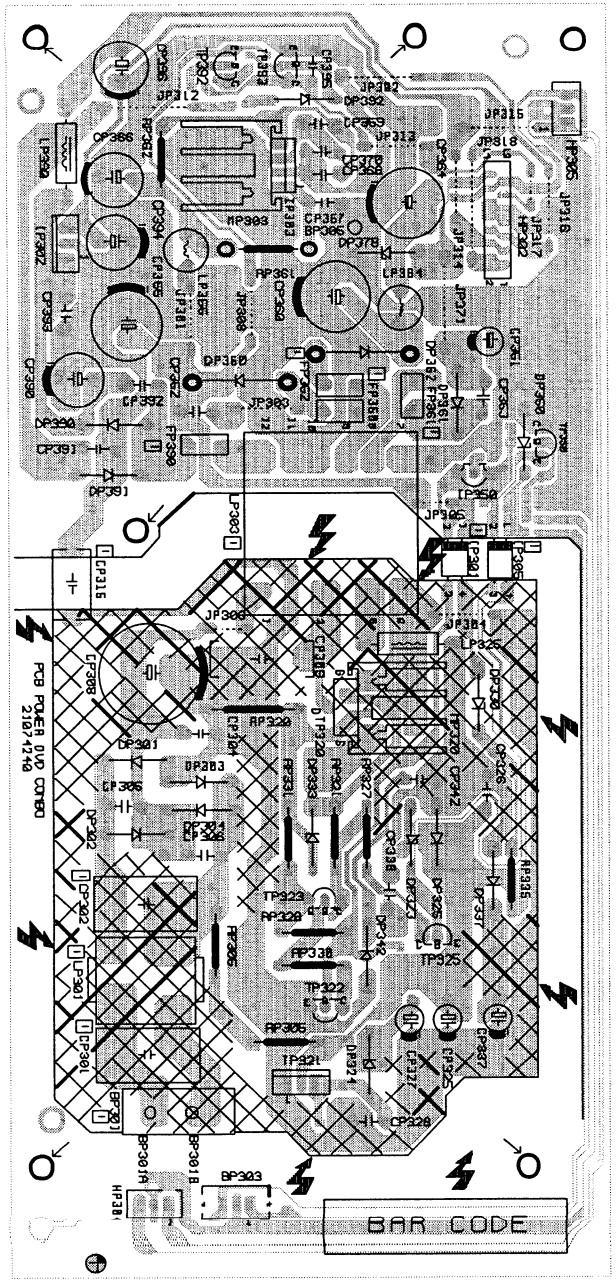

SOLDER SIDE - COTÉ CUIVRE - LÖTSEITE - LATO SALDATURE - LADO DEL COBRE

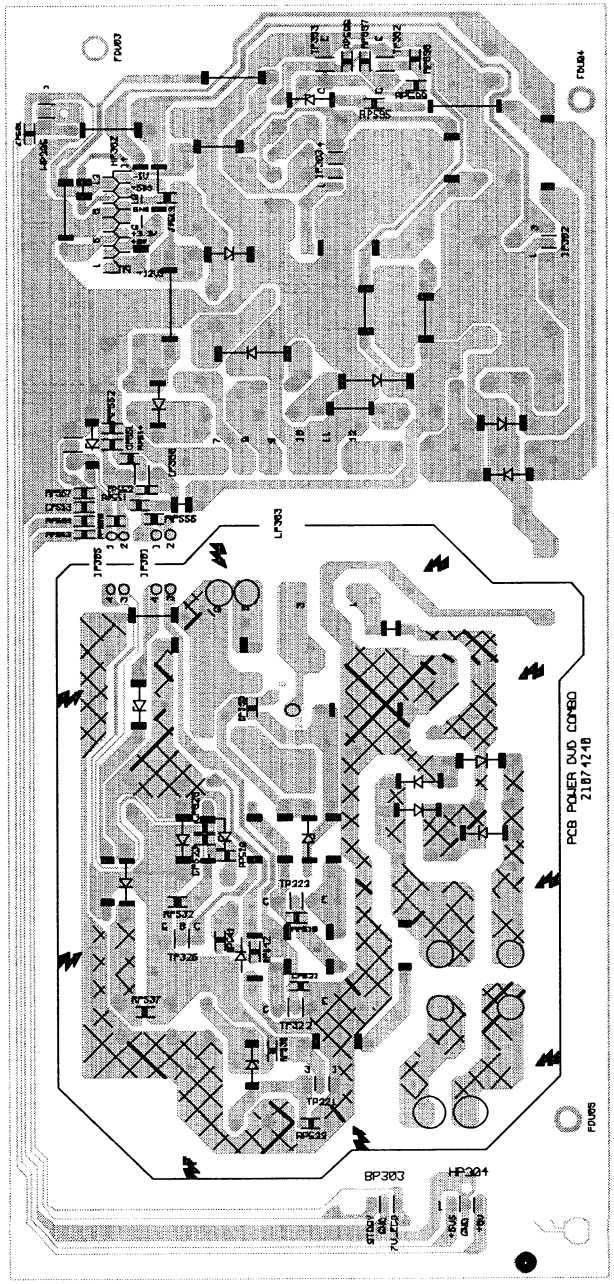

POWER DISTRIBUTION BOARD - INTERFACE SECTEUR - LEITERPLATTE SPANNUNGSVERTEILUNG
PIASTRA DISTRIBUZIONE ALIMENTAZIONI - PLACA DE DISTRIBUCION DE LA ALIMENTACION

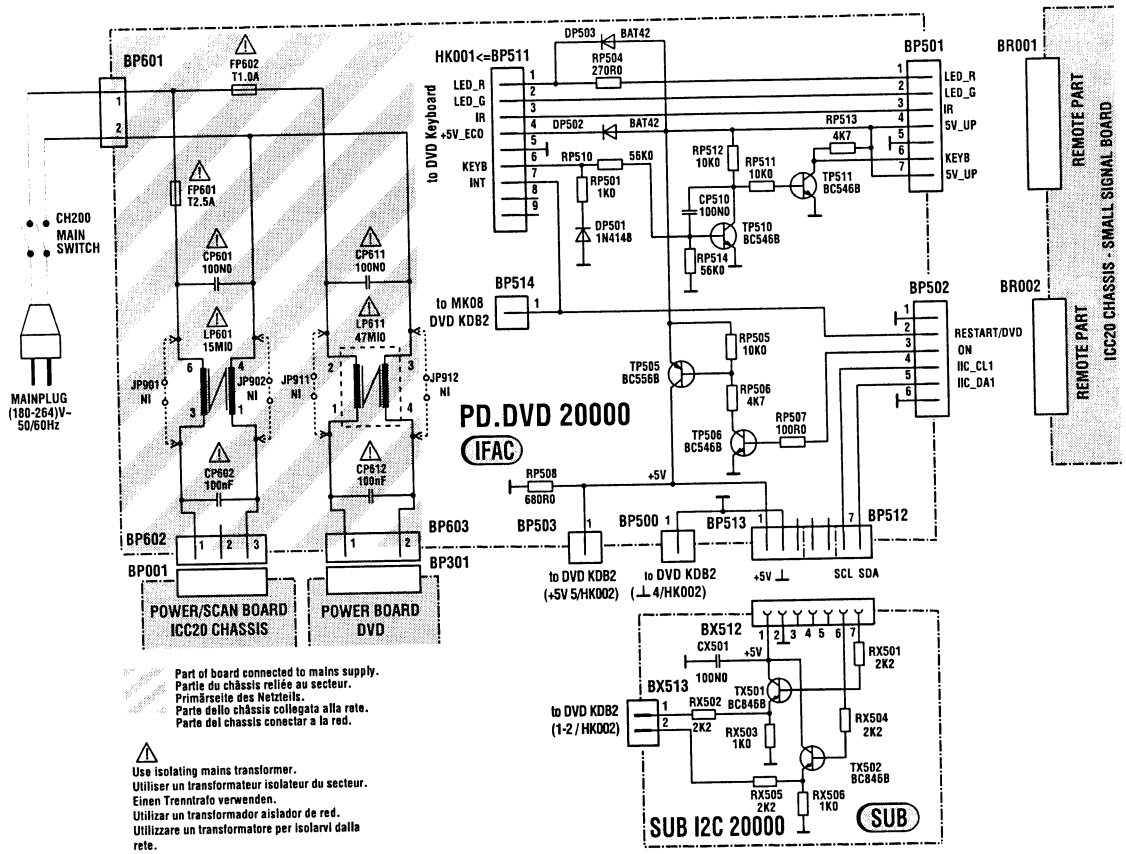

COMPONENT SIDE - COTE COMPOSANTS - BESTÜCKUNGSSEITE - LATO COMPONENTI - LADO COMPONENTES

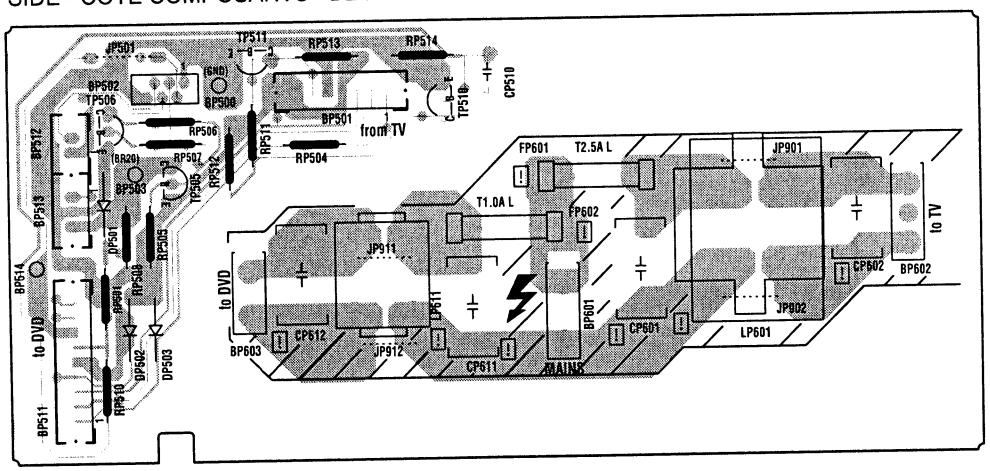

SOLDER SIDE - CÔTE SOUDURES - LÖTSEITE - LATO SALDATURE - LADO SOLDADURAS

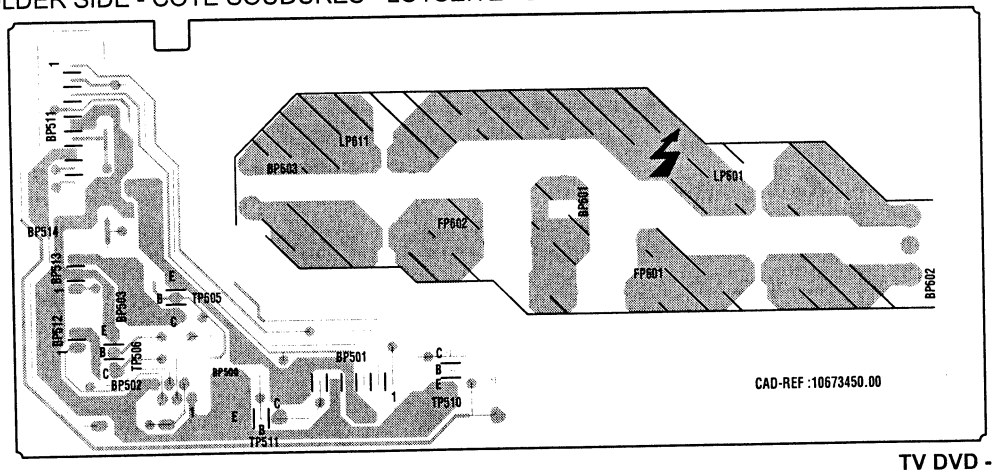

TV DVD - ICC20
First issue11 / 00

POWER / SCAN BOARD - PLATINE ALIMENTATION / BALAYAGE - NETZTEIL- UND ABLENKPLATINE - PIASTRA DEFLESSIONE / ALIMENTAZIONE - PLACA ALIMENTACIÓN / BARRIDOS

SOLDER SIDE - CÔTE SOUDURES - LÖTSEITE - LATO SALDATURE - LADO SOLDADURAS

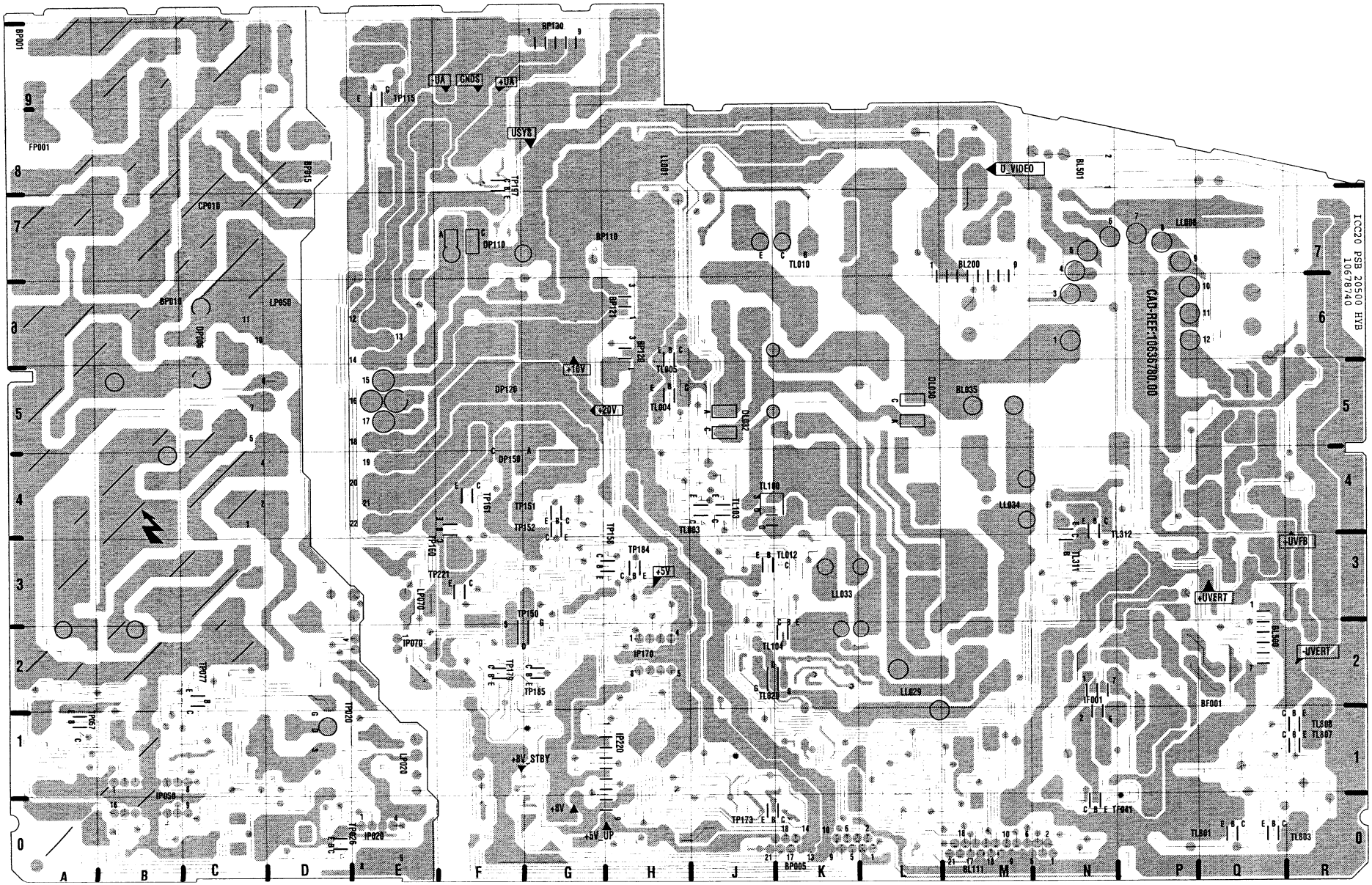

ICC20
First issue 05 / 00

POWER / SCAN BOARD - PLATINE ALIMENTATION / BALAYAGE - NETZTEIL- UND ABLENKPLATINE - PIASTRA DEFLESSIONE / ALIMENTAZIONE - PLACA ALIMENTACIÓN / BARRIDOS

SOLDER SIDE - CÔTE SOUDURES - LÖTSEITE - LATO SALDATURE - LADO SOLDADURAS

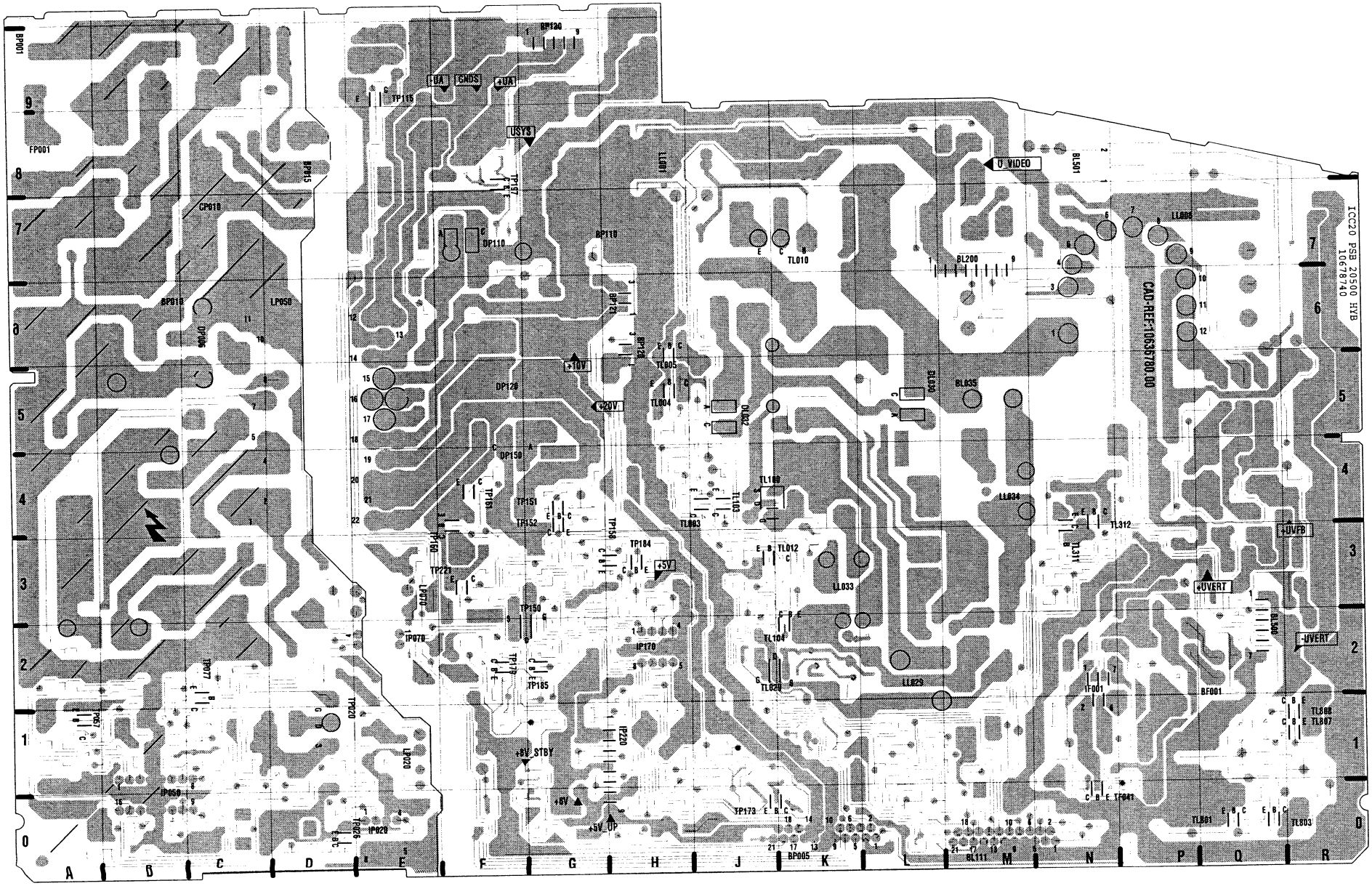

VIDEO AMPLIFIER BOARD - PLATINE AMPLIFICATEURS VIDEO - VIDEOVERSTÄRKERPLATTE - PIASTRA AMPLIFICATORE VIDEO - PLATINA AMPLIFICADOR VIDEO

COMPONENT SIDE - COTE COMPOSANTS - BESTÜCKUNGSSEITE - LATO COMPONENTI - LADO COMPONENTES

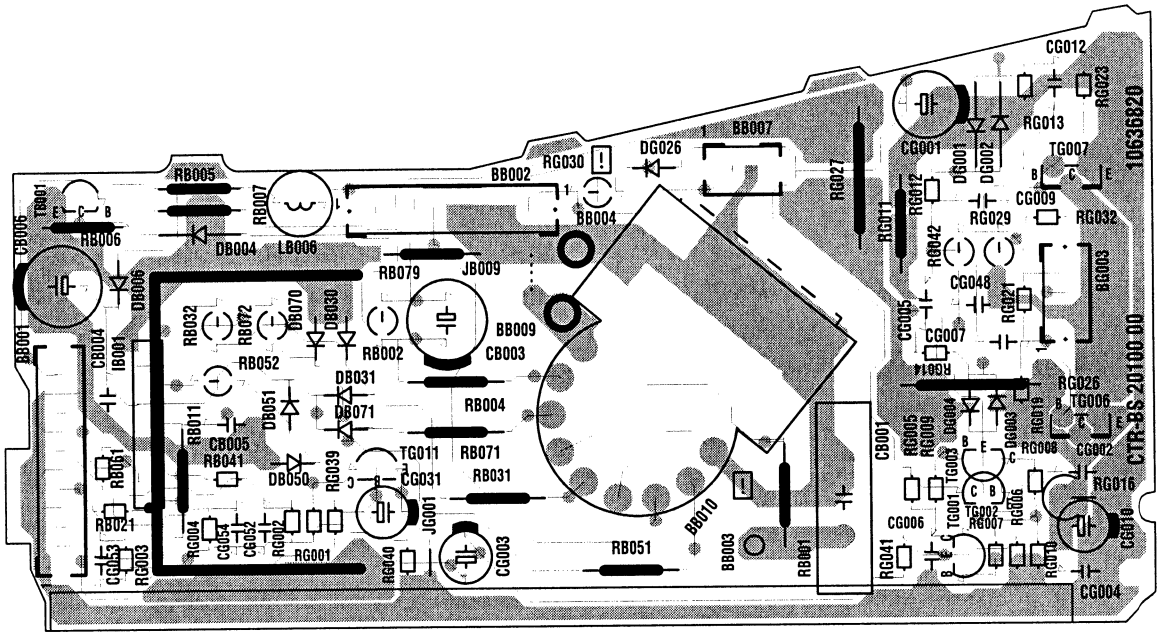

SOLDER SIDE - CÔTE SOUDURES - LÖTSEITE - LATO SALDATURE - LADO SOLDADURAS

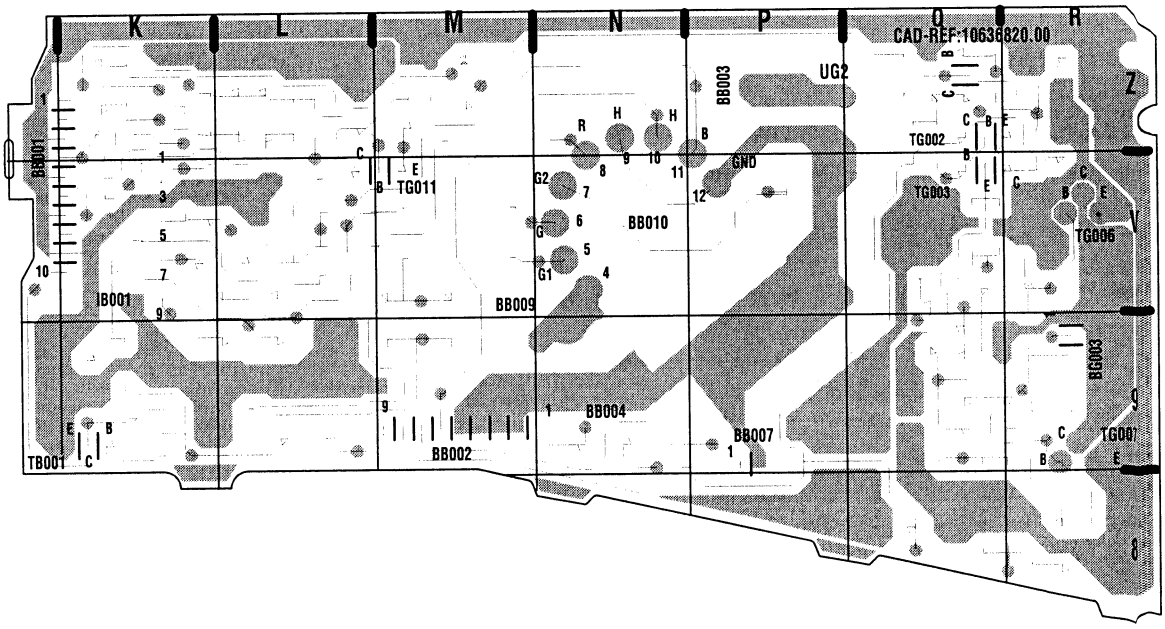

AV INTERFACE PRINTED CIRCUIT BOARD - CIRCUIT IMPRIME DE LA PLATINE INTERFACE AV - LEITERPLATTE INTERFACE AV - PIASTRA INTERFACE AV - PLATINA INTERFACE AV

COMPONENT SIDE - COTÉ COMPOSANTS - BESTÜCKUNGSSEITE - LATO COMPONENTI - LADO COMPONENTES

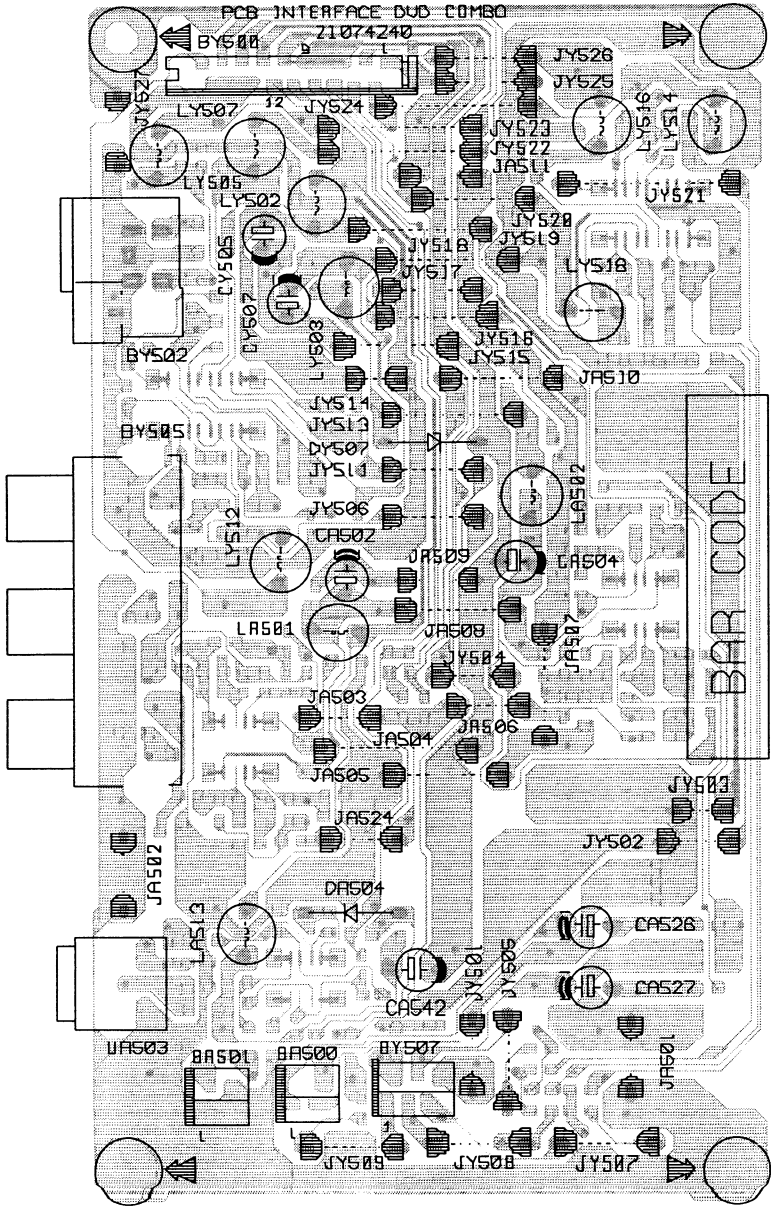

SOLDER SIDE - COTÉ CUIVRE - LÖTSEITE - LATO SALDATURE - LADO DEL COBRE

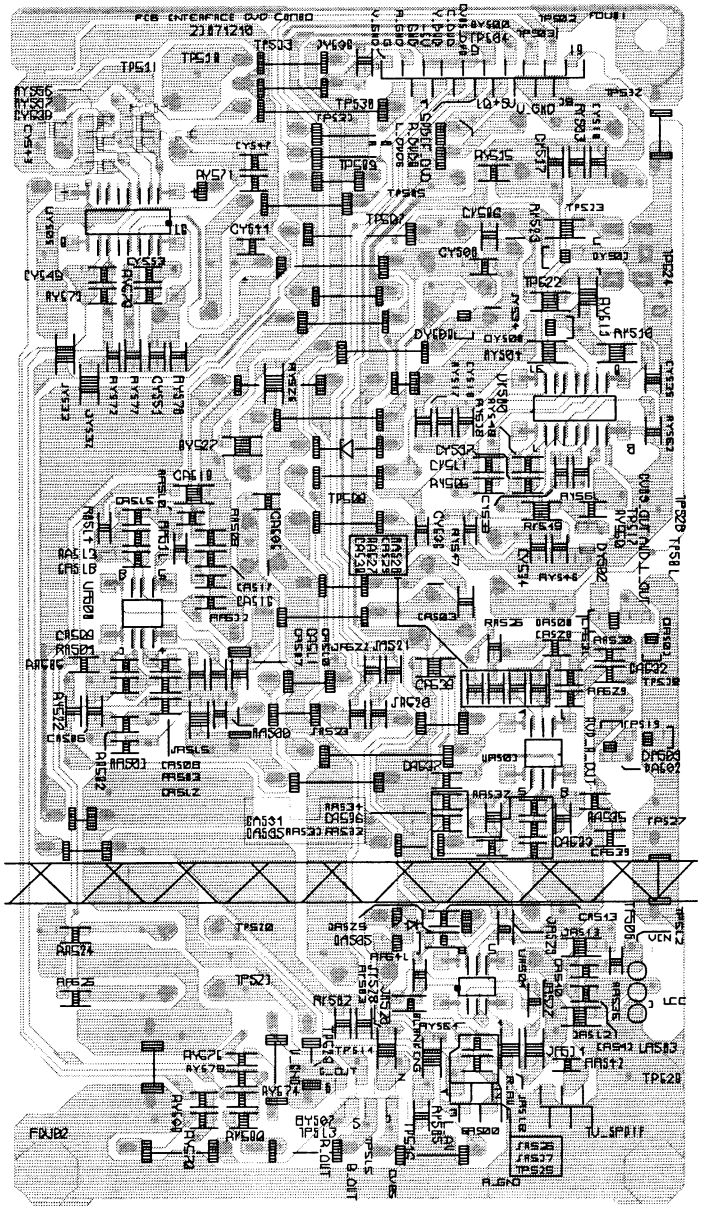

SMALL SIGNAL BOARD - PLATINE PETITS SIGNAUX - SIGNAL-PLATINE - PIASTRA PICCOLI SEGNALI - PLACA PEQUEÑA SEÑAL

COMPONENT SIDE - COTE COMPOSANTS - BESTÜCKUNGSSEITE - LATO COMPONENTI - LADO COMPONENTES

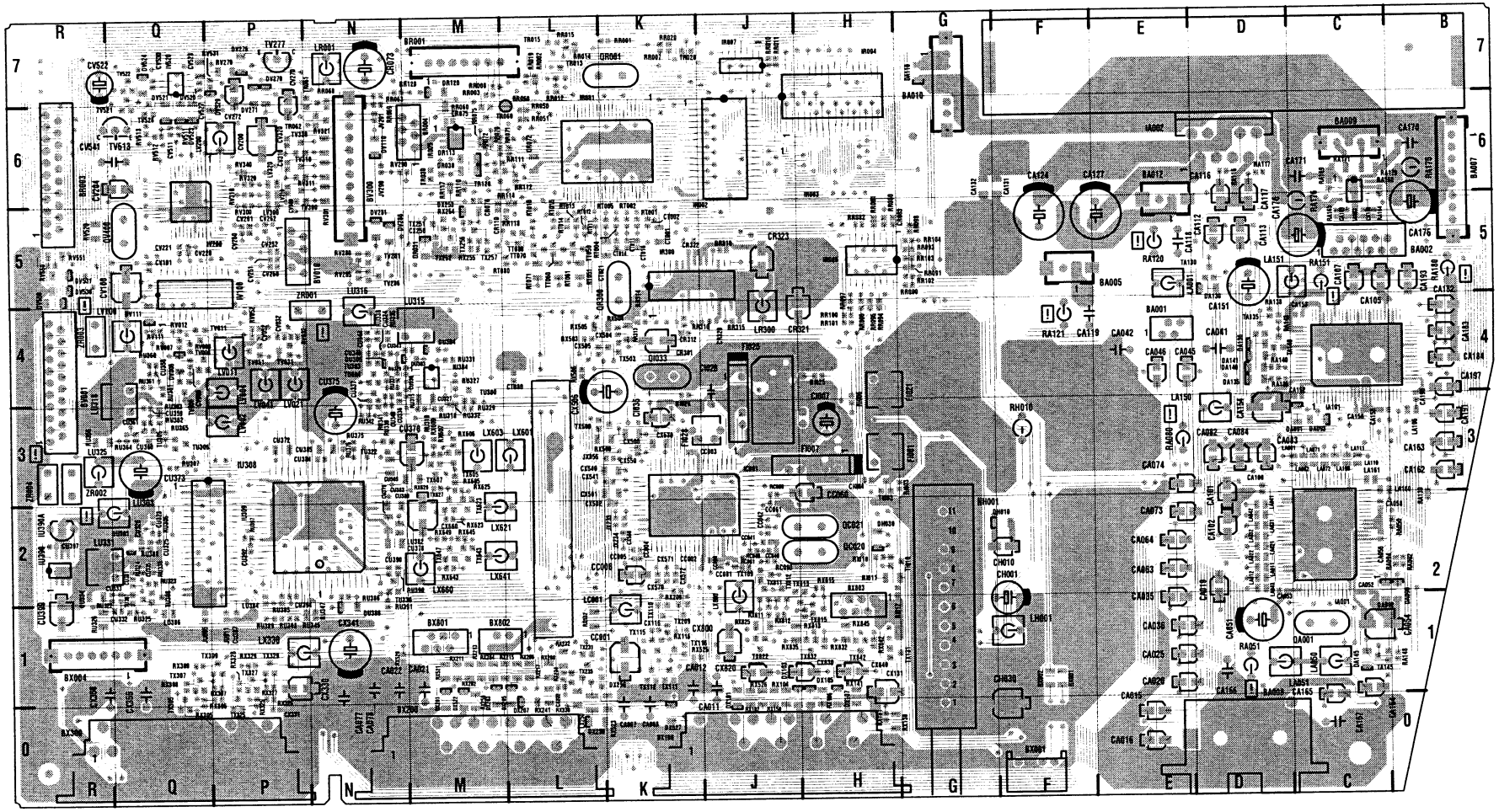

SMALL SIGNAL BOARD - PLATINE PETITS SIGNAUX - SIGNAL-PLATINE - PIASTRA PICCOLI SEGNALI - PLACA PEQUEÑA SEÑAL

SOLDER SIDE - CÔTE SOUDURES - LÖTSEITE - LATO SALDATURE - LADO SOLDADURAS

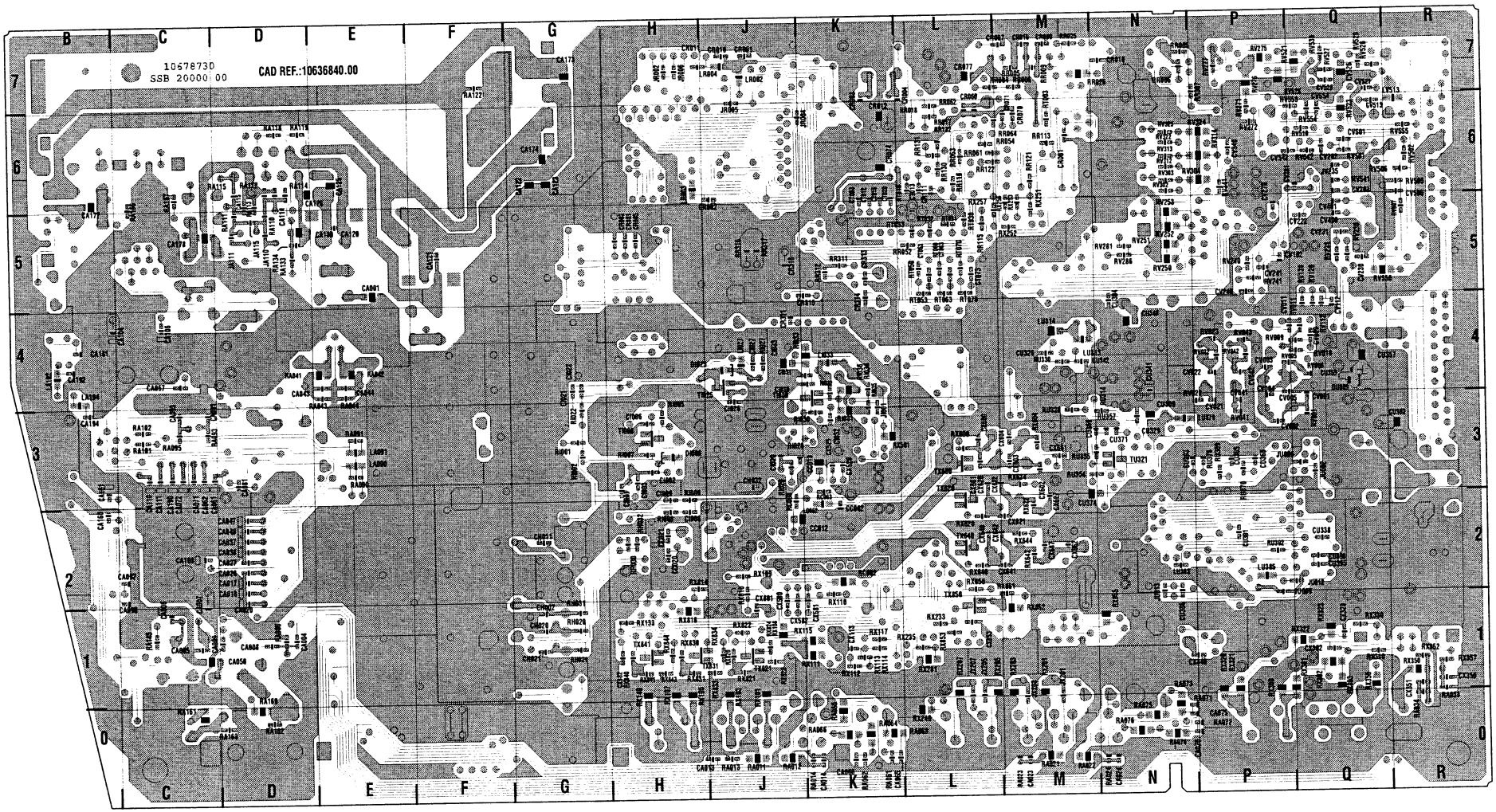

THOMSON MULTI MEDIA

ICC20 Small Signal Board (SSB) exchange method

Escaping production mode

The replacement board will be delivered in the production mode; this can be easily switched to normal operation once the television has been switch ON by pressing and holding the VOL – (minus) button for approximately 5-seconds.

Setting the language

The board will be delivered with its menus in French.

If you want to select another language proceed as follows: -

- Press the "Menu" key on the remote control unit (RCU)
- In the "Sommaire" menu select the "Installation" sub-menu, and then select "Reglages personnels".
- In the "Reglages personnels"menu select "Langues des menus".
- Now select the menu language you require, once selected press the "Exit" key on the RCU.

Saving the NVM data

Once fitted, the board has to be aligned and adjusted in the Service Mode, however it is possible to save time by copying the contents of the NVM onto a computer without de-soldering it from the board as follow: -

1. Force the microprocessor into the reset mode by connecting the **reset** pin to ground. The best point to pull down the **reset line** is at the cathode of diode DR120 (not fitted).
2. Temporally re-connect the faulty SSB board.
3. Switch "ON" the television.
4. Now the contents of the NVM can be saved to a PC via the TECI bus, an interface kit for copy the NVM content is available from After Sales under Part No. **10613570**

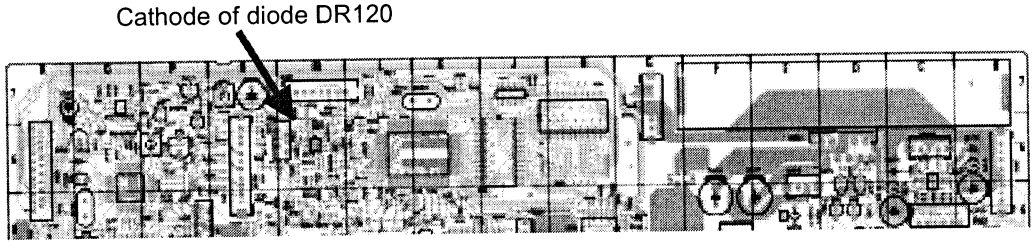

Service Mitteilungen

Betroffene Geräte/Chassis : ICC20

Symptom :
Heller vertikaler Streifen in der Mitte des Bildes.

Abhilfe :
Parallel zur Spule LL010 eine Diode RGP15G, ET-Nr. 102 728 00, löten. Die Kathode an den Kollektor des Transistors TL010.

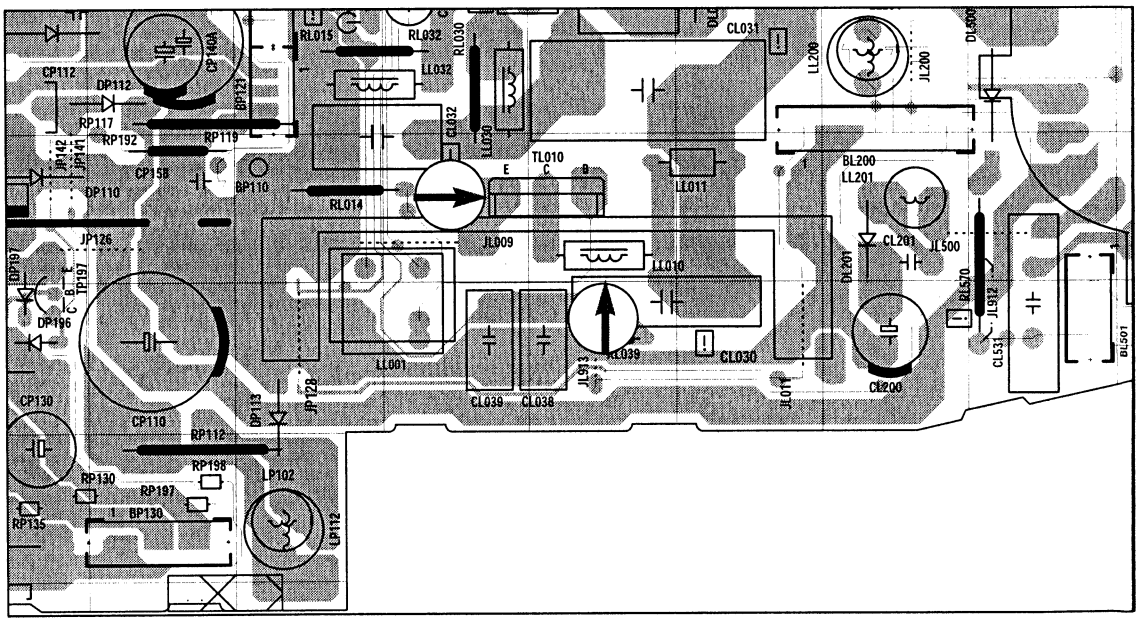

IRIS CODE: Der Code, wie unten beschrieben, wird gebraucht um die Fehler im Garntiepapier aufzuführen.Es wird damit beabsichtigt Ihnen den Bericht leichter und zuverlässiger zu machen.

Zustand/ Symptom	Teilenummer	Menge	Position	Sektion	F.Code	R. Code
1 3 2 x	1 0 2 7 2 8 0 0	0 1	T L 0 1 0	D F L	Z	K

Die weißen Kästchen müssen nicht ausgefüllt werden. ☐

TECHNICAL INFORMATION

Finished products / Chassis concerned : ICC20

Symptom / Problem observed :
Light vertical band down the centre of the screen.

Solution :
Add an RGP15G diode **(Part No. 10272800)** in parallel with inductor LL010 on copper side of the power and deflection printed circuit board. (diodes cathode to the collector of TL010)

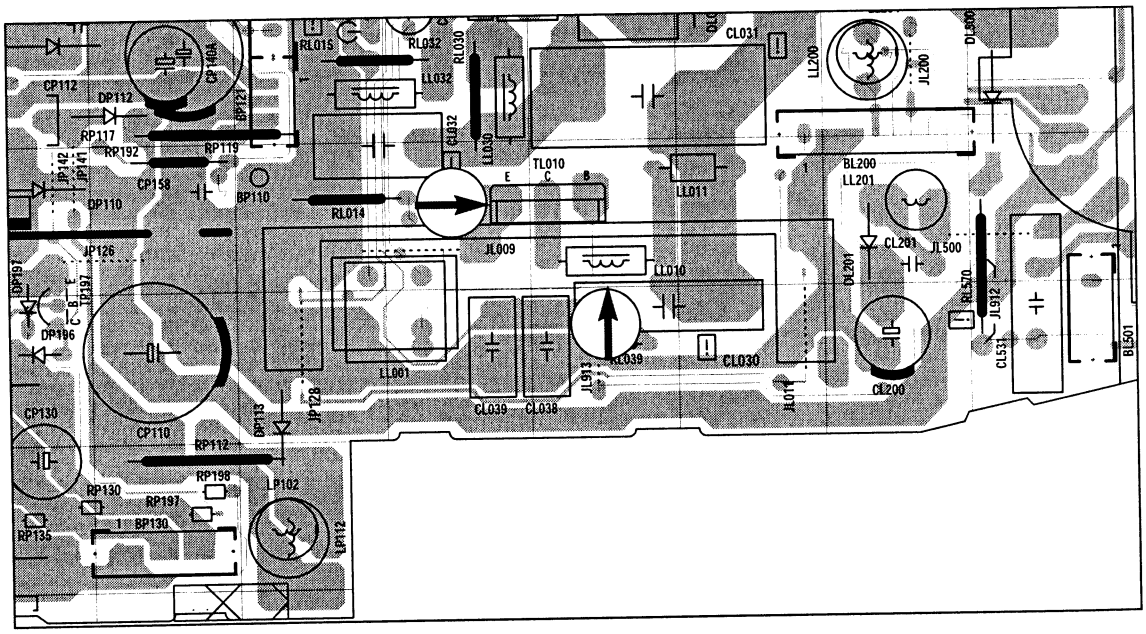

IRIS CODE : The code mentioned below must be used to report the failure in the warranty sheet. It is proposed to make your report easier and more reliable.

Condition/ Symptom/	Part Code Number	Qty	Position	Section	Fault Code	Repair Code
1 3 2 X	1 0 2 7 2 8 0 0	0 1	D L 0 1 2	D F L	Z	K

You do not need to write anything in the white boxes

TECHNICAL INFORMATION

Finished products / Chassis concerned : ICC20

Object / Improvement of the demodulated picture in L standard (France only)

Symptom / Problem observed :
Light horizontal band at the top of the picture, mainly visible on programme 5. (la 5 & Arte)

Cause :
AGC too time constant too fast.

Solution :
Replace metalised polyester capacitor in position CI028 (1µF) by 2.2µF 50V. **(Part N° 13085600)**

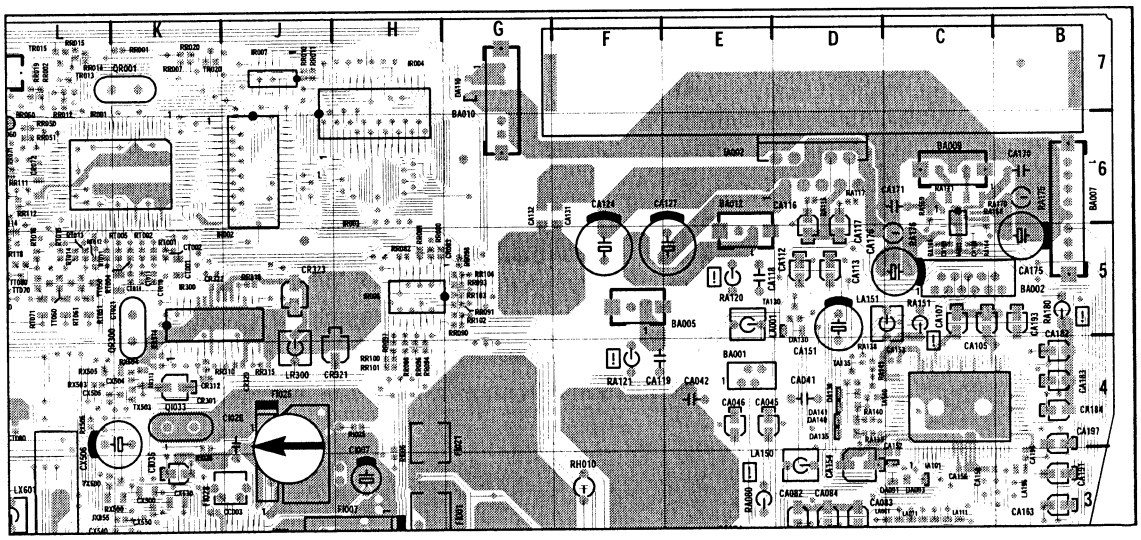

IRIS CODE : The code mentioned below must be used to report the failure in the warranty sheet. It is proposed to make your report easier and more reliable.

Condition/ Symptom/	Part Code Number	Qty	Position	Section	Fault Code	Repair Code
1 3 2 X	1 3 0 8 5 6 0 0	0 1	C I 0 2 8	I F C	Y	A

You do not need to write anything in the white boxes

THOMSON MULTI MEDIA

TV - DVD

Brandt FERGUSON SABA TELEFUNKEN THOMSON

PARTS LIST
LISTE PIECES DETACHEES
ERSATZTEILLISTE
LISTA PARTI DI RICAMBIO
LISTA DE PIEZAS DE REPUESTO

THOMSON
32WT45ES
Chassis ICC20 TV / DVD

MODULES

PSB	**C20PB20 B*PW****0* 00**	**10675420**
SSB	**C20SB20 B5**08RD31**	**10684580**
AUDI	**PA/SW20000**	**10626290**
IFAC	**POWER DISTRIBUTION**	**10673240**
MPEG	**MPEG**	**21054290**
SMPS	**SMPS**	**21049990**
IFAC	**AV INTERFACE**	**21054300**
KB	**KDB1-2**	**21049130**

FP360,362, **ZP**009	MP315	⚠ 10575090
FP361	RXE025	⚠ 10529720
FP390	RXE090	⚠ 10529790
GK101	TSOP1333	25358570
IA000	TDA7298	10348810
IB001	TDA6108JF	10616240
IF001	TDA8177F	10352880
IK001	TMP87PS38F OTP S2.0 FLAT	21055500
IK003	TFMS5330B	20627780
IP020	VIPER20DIP	25408950
IP050	TEA2262	10495720
IP070,301,305	TLP621 GR(D4-LF2 T)	⚠ 20827900
IP170	LM393/NJM2903D	46069900
IP220	TDA8139	10044580
IP302	MC7808CT	10263430
IP303	PQ3RD13	15168930
IP350	TL431	15069010
UA500,501	MC33078D FLAT	10319560
UY500,505	TSH94D FLAT	15282180
ZL221,251	MP125	⚠ 10469180
ZL231	MP40	⚠ 10469170

TA401,**TF**041, **TL**103,312,803, **TP**173,179,505	BC556B	16001020
TB001,**TL**311	BF422	16003090
TG001	BF199	16002950
TG002	BF370	25420830
TG006	BD140-16	25425020
TG007	BD139-16	16001760
TG011,**TL**003, 104,801,**TP**026, 080,115,151, 152,158,160, 161,184,185, 197,221,506, 510,511	BC546B	45001866
TK001	BC848B SMD	16006290
TL004	MPSW01A	70436520
TL005	MPS750	16001340
TL010	ON4977/BU2525AX	10461310
TL029,100	STP10NB20FP	25414550
TL807	BC327-40	16000450
TL808,**TP**057	BC337-40	45001466
TP020	STH13NB60FI	25381050
TP150	STP22NE03L (TO220)	25341950
TP320	2SK2605	⚠ 20880040
TP321	MCR106-6 400V 4A	20813760
TP322,393	BC548B	16000930
TP323	KTC8550D	21039270
TP325,350,392	BC558B	16001110

DA400,**DG**001, 002,003,004, **DL**001,073,805, **DP**024,054,055, 057,064,069, 115,158,160, 161,170,183, 188,193,194, 196,197,221, 230,501	1N4148	44009209
DA500,501,502, 503,**DY**500,501, 502	BZT55C15 SMD	15187290
DB004	1N4004	44009009
DB006,030,031, 050,051,070, 071,**DL**043,305, **DP**023,342	BAV21	44044407
DF011	BZW04-58	10368210
DF031,033, **DL**302,303, **DP**061,220,361	RGP10G	10459090
DG026	BZX55C6V8	50890650
DK005	LL4148 SMD	16012450
DK006	BZT55C5V1 SMD	15196090
DK007	ZMM2,7 SMD	16030100
DL028,222,252	1N4001	16008160
DL029	RGP02-20	10472330
DL030	DTV32F-1500	10452490
DL032	STTA806DI	25422190
DL034,036,102	EGP10D	20953640
DL101	BZX55C13	70438310
DL201,**DP**112	MUR1100E	10360280
DL221,251	FUF5402	10458530
DL231,**DP**020, 051,113	FUF4005/MUR160	16009580
DL301	BZX85C18	50890010
DP001,002,003, 004,006	GP30M	10455410
DP008	FUF5404	20150190
DP021	RGP10M	10455320
DP053,333	BZX55B15/ZPD15 2%	80444020
DP110	BYT08PI-1000	25442210
DP120,140	S410D	10527250
DP130,135	MUR420	16009630
DP150	BYW29-150	16009140
DP152	ZPD10 2%	80444160
DP301,302,303, 304	BYW27-1000	10455390
DP323,330	ZPD8,2	44021504
DP324	ZPD24	44016504
DP325,337,390, 391	RGP15G	10272800
DP350	ZPD4,7/BZX55C4V7	20475400
DP360,362	1N5822	44058204
DP392	BZX55B5V1/ZPD5V1 2%	44035702
DP502	BAT42	16007410
GE101	TLUV5300 LED	11137650
GK001	LTL-1BEHJ OG/P-GN	21085280

R : RECYCLED PART
: PIECE RECYCLEE
: AUSTAUSCHTEILE
: RICAMBIO RICICLATO
: MODULO REPROCESADO

For any requests, please contact THOMSON multimedia after sales service area
Pour toutes précisions, contactez votre service apres vente local THOMSON multimedia
Für weitere Auskünfte, wenden Sie sich bitte an die THOMSON multimedia Kundendienste
Per precisazioni, contattare l'assistenza tecnica THOMSON multimedia
Para cualquier pregunta, por favor contactar con el responsable de zona del servicio postventa de THOMSON multimedia

08 / 2000
REV. N° 0 00 / 00
35130210
00000000

No copying, translation, modification on other use authorized. All rights reserved worldwide. • Tous droits de reproduction, de traduction, d'adaptation et d'exécution réservés pour tous les pays. • Sämtliche Urheberrechte an diesen Texten und Zeichnungen stehen uns zu. Nachdrucke, Vervielfältigungen - auch auszugsweise - nur mit unserer vorherigen Zustimmung zulässig. Alle Rechte vorbehalten. • I diritti di riproduzione, di traduzione, e esecuzione sono riservati per tutti i paesi. • Derechos de reproduccion, de traduccion, de adaptacion y de ejecucion reservados para todos los paises.

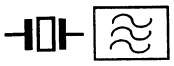

QK001	8M0HZ	21063030

LF021	22U0H 10% 1,6A	10470180
LL029	OST-WEST SPULE	10347650
LL034		10679870

PP180	1K0 OHM	70434550

RA407	4R7 OHM 5% 0,35W	⚠ 10226310
RB001,004	1K5 OHM 5% 0,50W	10121880
RB031,051,071	560R0 OHM 10% 0,50W	10257590
RB032,052,072, **RE**102,**RP**181	100R0 OHM 5% 0,25W	30943330
RF003,006	1K3 OHM 1% 0,40W	15012810
RF008	1R5 OHM 1% 0,70W	10451140
RF011,012	1R82 OHM 1% 0,70W	10451420
RG026,027	3K3 OHM 5% 3W	30941170
RG030,**RL**808, 809	22R0 OHM 5% 0,25W	⚠ 35031220
RK101	453R0 OHM 1% 0,250W	15018140
RK102	681R0 OHM 1% 0,25W	15020310
RK103	1K5 OHM 1% 0,25W	80437630
RK104	3K32 OHM 1% 0,25W	15017270
RL015	6R8 OHM 5% 0,25W	⚠ 41023309
RL021	1R21 OHM 1% 0,70W	13010820
RL022,**RP**228	1K0 OHM 1% 0,25W	15012570
RL023	3M9 OHM 2% 0,40W	13057750
RL024	100K0 OHM 1% 0,25W	15010160
RL025	1R0 OHM 1% 0,70W	10254220
RL027	2K2 OHM 5% 0,50W	⚠ 10239310
RL037	330R0 OHM 10% 0,50W	14050190
RL044	536K0 OHM 1% 0,25W	15019140
RL100,221,251	0R27 OHM 5% 2,50W	10263600
RL231	4R7 OHM 5% 2,5W	10471330
RL303	33K2 OHM 1% 0,25W	15016530
RL308	15K0 OHM 1% 0,25W	15011700
RL310	46K4 OHM 1% 0,70W	10403710
RL311	2K21 OHM 1% 0,25W	15015480
RP004	2R7 OHM 5% 4,50W	10379110
RP015	18R0 OHM 220V PTC	⚠ 41398800
RP020	100R0 OHM 5% 0,75W	⚠ 10230030
RP049	33R0 OHM 5% 2W	50888890
RP050	10M0 OHM 5% 0,70W	⚠ 20564520
RP051	100R0 OHM 5% 4,50W	10379830
RP052	0R1 OHM 5% 2,50W	⚠ 10288160
RP090	22K1 OHM 1% 0,25W	60442350
RP179	8K25 OHM 1% 0,25W	15021830
RP180	205K0 OHM 1% 0,40W	15013970
RP227	2K26 OHM 1% 0,25W	15015500
RP320,361	1R0 OHM 5% 2,50W	10383240

CB001	10N0F 3K0V	14036450
CB004,**CL**043	100N0F 20% 250V	13072860
CF020	100N0F 10% 100V	20467110
CL030	1N9F 2.5% 2K0V	10532420
CL031	11N6F 2,5% 2K0V	40406501
CL032	33N0F 5% 400V	10076920
CL033	680N0F 5% 400.0V	⚠ 10552180
CL034	12N0F 2% 400V	10672180
CL035	410N0F 5% 400V	10180780
CL038,039	27N0F 5% 250V	50895120
CL100	150N0F 5% 250V	10647360
CL201,221,231, 251	330P0F 20% 1K0V	14035270
CL301	10N0F 5% 400V	10588870
CP001,002,601, 602,611,612	100N0F 20% 275V	⚠ 10331520
CP003,004,005, 304	4N7F 1K0V	10058740
CP006	470N0F 10% 400V	10469630
CP007	560N0F 5% 250V	10376360
CP008,051,121, 131,136,141	470P0F 10% 2K0V	10099390
CP010	390U0F 20% 400V	25444380
CP015	68N0F 20% 250V	10256210
CP020,022	220P0F 10% 1K0V	25460410
CP021	1N0F 5% 400V	13055520
CP049	1N5F 20% 400V	⚠ 10442770
CP050	150P0F 20% 400V	⚠ 20738090
CP052,112	2N2F 10% 1K0V	13090980
CP111	470P0F 10% 2K0V	25392030
CP301,302	100N0F 20% 275V	⚠ 40404090
CP305,306	1N5F 10% 1K0V	20338740
CP308	47U0F 20% 385V	⚠ 50844400
CP309	2N2F 20% 1K0V	43325400
CP315	1N0F 20% 400V	⚠ 43106800
CP362,363,392	1N0F 20% 1K0V	20388780

LL001		10669660
LL008	DSTFBT 1372.0054	⚠ 10675710
LL033		10347660
LL037		⚠ 10518250
LP001,601		⚠ 10203560
LP020	STAND-BY	⚠ 25425970
LP050	SMT7LZ	⚠ 10643540
LP070	DRIVER	⚠ 60412091
LP301,611		⚠ 20247580
LP303	TFSMT	⚠ 2105993A

OTHER PARTS
AUTRES PIECES
SONSTIGE TEILE
ALTRE PARTI
OTRAS PIEZAS

BB010	CATHODE RAY TUBE SOCKET SUPPORT TUBE CATHODIQUE BILDROEHRENFASSUNG SUPPORTO TUBO CATODICO SOPORTE T.R.C	⚠ 80298800
BJ010	CINCH SOCKET PRISE CINCH CINCH-BUCHSE PRESA CINCH TOMA CINCH	10037440
BJ011	SVHS SOCKET PRISE SVHS S-VHS-BUCHSE PRESA SVHS TOMA SVHS	20392900
BK004	CABLE 6X 255MM CABLE NAPPE 6X 255MM FOLIENKABEL 6X 255MM CAVO DI COLLEGAMENTO 6X 255MM CABLE 6X 255MM	⚠ 21089390
BK005	CABLE 11X 340MM CABLE NAPPE 11X 340MM FOLIENKABEL 11X 340MM CAVO DI COLLEGAMENTO 11X 340MM CABLE 11X 340MM	21082290
BQ012	JACK SOCKET PRISE JACK BUCHSE PRESA JACK TOMA JACK	10539510
BU702	CABLE 19X 70MM CABLE NAPPE 19X 70MM FOLIENKABEL 19X 70MM CAVO DI COLLEGAMENTO 19X 70MM CABLE 19X 70MM	21067570
BY500	CABLE 19X 70MM CABLE NAPPE 19X 70MM FOLIENKABEL 19X 70MM CAVO DI COLLEGAMENTO 19X 70MM CABLE 19X 70MM	21063420
BY502	SVHS SOCKET PRISE SVHS S-VHS-BUCHSE PRESA SVHS TOMA SVHS	20862120
BY505	CINCH SOCKET 3 ASSY ENSEMBLE 3 PRISES CINCH CINCH 3 BUCHSEN-EINHEIT ASSIEME 3 PRESA CINCH CONJUNTO 3 TOMA CINCH	21063440
CH200	ON/OFF SWITCH CONTACTEUR MARCHE/ARRET EIN-AUS SCHALTER CONTATTORE ACCESO/SPENTO CONTACTOR MARCHA/PARADA	⚠ 10276500
CJ015	CABLE WITH CONNECTOR 9 PINS 340MM CABLE AVEC CONNECTEUR 9 VOIES 340MM KABEL MIT VERBINDER 9 PINS 340MM CAVO CON CONNETTORE 9 SPINOTTI 340MM CABLE CON CONECTOR 9 PUNTOS 340MM	10231790

CJ016	CABLE WITH CONNECTOR 3 PINS 220MM CABLE AVEC CONNECTEUR 3 VOIES 220MM KABEL MIT VERBINDER 3 PINS 220MM CAVO CON CONNETTORE 3 SPINOTTI 220MM CABLE CON CONECTOR 3 PUNTOS 220MM	25459200
CJ020	CABLE WITH CONNECTOR 10 PINS 340MM CABLE AVEC CONNECTEUR 10 VOIES 340MM KABEL MIT VERBINDER 10 PINS 340MM CAVO CON CONNETTORE 10 SPINOTTI 340MM CABLE CON CONECTOR 10 PUNTOS 340MM	10526610
CJ030	CABLE WITH CONNECTOR 6 PINS 500MM CABLE AVEC CONNECTEUR 6 VOIES 500MM KABEL MIT VERBINDER 6 PINS 500MM CAVO CON CONNETTORE 6 SPINOTTI 500MM CABLE CON CONECTOR 6 PUNTOS 500MM	25460570
CJ035	CABLE WITH CONNECTOR 3 PINS 580MM CABLE AVEC CONNECTEUR 3 VOIES 580MM KABEL MIT VERBINDER 3 PINS 580MM CAVO CON CONNETTORE 3 SPINOTTI 580MM CABLE CON CONECTOR 3 PUNTOS 580MM	30020170
CJ075	CABLE WITH CONNECTOR 3 PINS 460MM CABLE AVEC CONNECTEUR 3 VOIES 460MM KABEL MIT VERBINDER 3 PINS 460MM CAVO CON CONNETTORE 3 SPINOTTI 460MM CABLE CON CONECTOR 3 PUNTOS 460MM	25443770
CJ076	CABLE WITH CONNECTOR 2 PINS 460MM CABLE AVEC CONNECTEUR 2 VOIES 460MM KABEL MIT VERBINDER 2 PINS 460MM CABLE CON CONNETTORE 2 SPINOTTI 460MM CABLE CON CONECTOR 2 PUNTOS 460MM	25443810
CJ081,143	CABLE WITH CONNECTOR 2 PINS 580MM GREEN CABLE AVEC CONNECTEUR 2 VOIES 580MM VERT CABLE MIT VERBINDER 2 PINS 580MM GRUEN CAVO CON CONNECTOR 2 SPINOTTI 580MM VERD CABLE CON CONECTOR 2 PUNTOS 580MM VERDE	10327420
CJ100	THT CABLE CABLE THT KABEL THT CAVO THT CABLE THT	⚠ 10664300
CJ105	CABLE 460MM 20KV HT CABLE 460MM 20KV HT KABEL 460MM 20KV HT CAVO 460MM 20KV HT CABLE 460MM 20KV HT	⚠ 10369650

CJ145	CABLE WITH CONNECTOR 8 PINS 300MM CABLE AVEC CONNECTEUR 8 VOIES 300MM KABEL MIT VERBINDER 8 PINS 300MM CABLE CON CONNETTORE 8 SPINOTTI 300MM CABLE CON CONECTOR 8 PUNTOS 300MM	25019130
CJ490	CABLE WITH CONNECTOR 7 PINS 260MM CABLE AVEC CONNECTEUR 7 VOIES 260MM KABEL MIT VERBINDER 7 PINS 260MM CAVO CON CONNETTORE 7 SPINOTTI 260MM CABLE CON CONECTOR 7 PUNTOS 260MM	25348010
FP001,601,602	2A5T TIME-LAG FUSE 2A5T FUSIBLE TEMPORISE 2A5T THERMISCHE SICHERUNG 2A5T FUSIBILE TEMPORIZZATO 2A5T FUSIBLE TEMPORIZADO	⚠ 10246750
SK001,002, 003,004,005, 015,016,017, 018,019,020, 021,022,023, 024,025	MICROSWITCH MICRO CONTACTEUR MIKROSCHALTER MICROINTERRUTTORE MICROCONTACTOR	20540300
SK101,102, 103,104	MICROSWITCH MICRO CONTACTEUR MIKROSCHALTER MICROINTERRUTTORE MICROCONTACTOR	30011100
SP015	RELAY 12V RELAIS 12V RELAIS 12V RELE 12V RELE 12V	⚠ 90294100
UA503	OPTICAL SOCKET PRISE OPTIQUE OPTICAL-BUCHSE PRESA OTTICA TOMA OPTICO	15293550

EQUIPMENT/PRESENTATION
EQUIPEMENT/PRESENTATION
AUSSTATTUNG/GEHAEUSE
PARTI VARIE
EQUIPO/PRESENTACION

FRONT PANEL DVD FACADE DVD FRONTPLATTE DVD PANNELLO FRONTALE DVD PANEL FRONTAL DVD	21050580
COVER TRAY CD CACHE TIROIR CD ABDECKUNG SCHUBLADE CD COPERCHIO CASSETTO CD CUBIERTA CORREDERA CD	21050770
LABEL (COVER TRAY CD) ETIQUETTE (CACHE TIROIR CD) ETIKETT (ABDECKUNG SCHUBLADE CD) ETICHETTA (COPERCHIO CASSETTO CD) ROTULO (CUBIERTA CORREDERA CD)	2110522A
BUTTON STRIP DVD CONTROL BARRETTE DE TOUCHES DVD CONTROL TASTENLEISTE DVD CONTROL PIATTINA TASTI DVD CONTROL PLACA DE TECLAS DVD CONTROL	21050610

KNOB OPEN/CLOSE TOUCHE OPEN/CLOSE TASTE OPEN/CLOSE TASTO OPEN/CLOSE TECLA OPEN/CLOSE	21050650
BUTTON STRIP TV CONTROL BARRETTE DE TOUCHES TV CONTROL TASTENLEISTE TV CONTROL PIATTINA TASTI TV CONTROL PLACA DE TECLAS TV CONTROL	21050800
BUTTON STRIP NAVIGATION BARRETTE DE TOUCHES NAVIGATION TASTENLEISTE NAVIGATION PIATTINA TASTI NAVIGAZIONE PLACA DE TECLAS NAVEGACION	21050710
KNOB GUIDE OK TOUCHE GUIDE OK TASTE GUIDE OK TASTO GUIDE OK TECLA GUIDE OK	21050680
TVM502A OPTICAL PLAYER TVM502A LECTEUR OPTIQUE TVM502A CD-LAUFWERK TVM502A ASSIEME OTTICA TVM502A MECANISMO OPTICO	10669590
FRONT PANEL TV FACADE TV FRONTPLATTE TV PANNELLO FRONTALE TV PANEL FRONTAL TV	25455470
REAR PANEL DOS RUECKWAND PANNELLO POSTERIORE TAPA POSTERIOR	⚠ 25465780
JACK PANEL BE15TH TABLEAU DE PRISES BE15TH JACK FRONTPLATTE BE15TH QUADRO DI PRESA JACK BE15TH TABLERO DE TOMA JACK BE15TH	⚠ 25467140
LOGO THOMSON LOGO THOMSON SCHRIFTZUG THOMSON MARCHIO THOMSON LOGOTIPO THOMSON	25376750
CHASSIS SLIDE SECURING GLISSIERE FIXATION CHASSIS SCHIEBER BEFESTIGUNG CHASSIS SVIVOLO DI FISSAGGIO CHASSIS CORREDERA DE SUJECION CHASIS	25413960
LOUDSPEAKER GRID BOOMER BE15TH GRILLE HAUT PARLEUR GRAVES BE15TH LAUTSPRECHER GITTER TIEFTOENER BE15TH GRIGLIA ALTOPARLANTE SUPERIOR BE15TH REJILLA ALTAVOZ GRAVES BE15TH	25465810
8R OHM 12W LOUDSPEAKER 60X160MM 8R OHM 12W HAUT PARLEUR 60X160MM 8R OHM 12W LAUTSPRECHER 60X160MM 8R OHM 12W ALTOPARLANTE 60X160MM 8R OHM 12W ALTAVOZ 60X160MM	25481710
8R OHM 20W LOUDSPEAKER 51X51MM 8R OHM 20W HAUT PARLEUR 51X51MM 8R OHM 20W LAUTSPRECHER 51X51MM 8R OHM 20W ALTOPARLANTE 51X51MM 8R OHM 20W ALTAVOZ 51X51MM	25461220
4R OHM 30W LOUDSPEAKER 130MM 4R OHM 30W HAUT PARLEUR 130MM 4R OHM 30W LAUTSPRECHER 130MM 4R OHM 30W ALTOPARLANTE 130MM 4R OHM 30W ALTAVOZ 130MM	10517870
ON/OFF BUTTON SI01TH TOUCHE MARCHE/ARRET SI01TH EIN-AUS TASTE SI01TH TASTA ACCESSO/SPENTO SI01TH TECLA MARCHA/PARADA SI01TH	25462910

POWER SUPPLY LEAD CORDON D'ALIMENTZATION NETZKABEL CAVO DI ALIMENTAZIONE CABLE DE ALIMENTACION	⚠ 25420360
CORD STOPPER ATTACHE CORDON SECTEUR ZUGENTLASTUNG BRIDA CORDONE DI ALIMENTAZIONE SUJECION CABLE DE ALIMENTACION	25071420
W76EJY011X121 CATHODE RAY TUBE W76EJY011X121 TUBE CATHODIQUE W76EJY011X121 FARBBILDROEHRE W76EJY011X121 TUBO CATODICO W76EJY011X121 T.R.C	⚠ 10670260
DOUBLE DEGAUSSING COIL BOBINE DE DEMAGNETISATION DOUBLE DOPPE ENTMAGNETISIERUNGSSPULE BOBINA DI SMAGNETIZZAZIONE DOPPIA BOBINA DE DESIMANTACION DOBLE	⚠ 10669680
EFC COIL BOBINE EFC EFC-SPULE BOBINA EFC BOBINA EFC	10542150
RCV400 REMOTE CONTROL RCV400 TELECOMMANDE RCV400 FERNBEDIENUNG RCV400 TELECOMANDO RCV400 TELEMANDO	21074280
FOLDING BOX EMBALLAGE CARTON KARTON IMBALLAGGIO CARTONE EMBALAJE CARTON	25417300
FITTING DOWNER CALE INFERIEURE POLSTER UNTEN DISTANZIATORE INFERIORE CALZO INFERIOR	25451020
FITTING UPPER CALE SUPERIEURE POLSTER OBEN DISTANZIATORE SUPERIORE CALZO SUPERIOR	25451030

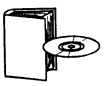

ICC20 SERVICE MANUAL EUROPE ICC20 DOC TECHNIQUE EUROPE ICC20 TECHNISCHE DOKUMENTATION EUROPE ICC20 DOCUMENTAZIONE TECNICA EUROPE ICC20 DOCUMENTACION TECNICA EUROPE	35118540
DVD17/20 SERVICE MANUAL DVD17/20 DOC TECHNIQUE DVD17/20 TECHNISCHE DOKUMENTATION DVD17/20 DOCUMENTAZIONE TECNICA DVD17/20 DOCUMENTACION TECNICA	35127160
ICC20 TV/DVD SERVICE MANUAL SUPPLEM. ICC20 TV/DVD DOC TECHNIQUE ADDITIF ICC20 TV/DVD TECHNISCHE DOKUMENT. ZUSATZ ICC20 TV/DVD DOCUMENTAZIONE ADDITIVO ICC20 TV/DVD DOCUMENTACION ADICCIONAL	35130200
32WT45ES PARTS LIST 32WT45ES LISTE PIECES DETACHEES 32WT45ES ERSATZTEILLISTE 32WT45ES LISTA PARTI DI RICAMBIO 32WT45ES LISTA PIEZAS DE REPUESTO	35130210
32WT45ES UM NL/DK/S/RU/CS/PL/H/SK 32WT45ES NU NL/DK/S/RU/CS/PL/H/SK 32WT45ES BA NL/DK/S/RU/CS/PL/H/SK 32WT45ES IU NL/DK/S/RU/CS/PL/H/SK 32WT45ES IU NL/DK/S/RU/CS/PL/H/SK	25473580
32WT45ES UM F/D/I/GB/GR/E/P 32WT45ES NU F/D/I/GB/GR/E/P 32WT45ES BA F/D/I/GB/GR/E/P 32WT45ES IU F/D/I/GB/GR/E/P 32WT45ES IU F/D/I/GB/GR/E/P	25466870

32WT45ES

The description and characteristics given here are of informative significance only, and non committal. To keep up the high quality of our products, we reserve the right to make any changes or improvement without previous notice. • Les descriptions et caractéristiques figurant sur ce document sont données à titre d'information et non d'engagement. En effet, soucieux de la qualité de nos produits, nous nous réservons le droit d'effectuer, sans préavis, toute modification ou amélioration. • Die Beschreibungen und Daten in dieser Anleitung dienen nur zur Information und sind nicht bindend. Um die Qualität unserer Produkte ständig zu verbessern, behalten wir uns das Recht auf Änderungen vor. • Le descrizioni e le caratteristiche date su questo documento sono fornite a semplice titolo informativo e senza impegno. Ci riserviamo il diritto di eseguire, senza preavviso, qualsiasi modifica o miglioramento. • Las descripciones y caracteristicas que figuran en este documento se dan a titulo de información y no de compromiso. En efecto, en bien de la calidad de nuestros productos, nos reservamos el derecho de efectuar, sin previo aviso, cualquier modificación o mejora -

THOMSON multimedia S.A au capital de 932 655 840 € - 46, Quai Alphonse Le Gallo 92648 Boulogne Cedex FRANCE - RCS NANTERRE B 333 773 174

POWER / SCAN BOARD - PLATINE ALIMENTATION / BALAYAGE - NETZTEIL- UND ABLENKPLA
POWER SUPPLY PART - PARTIE ALIMENTATION - NETZTEIL - ALIMENTAZIONE - ALIMENTACIÓ

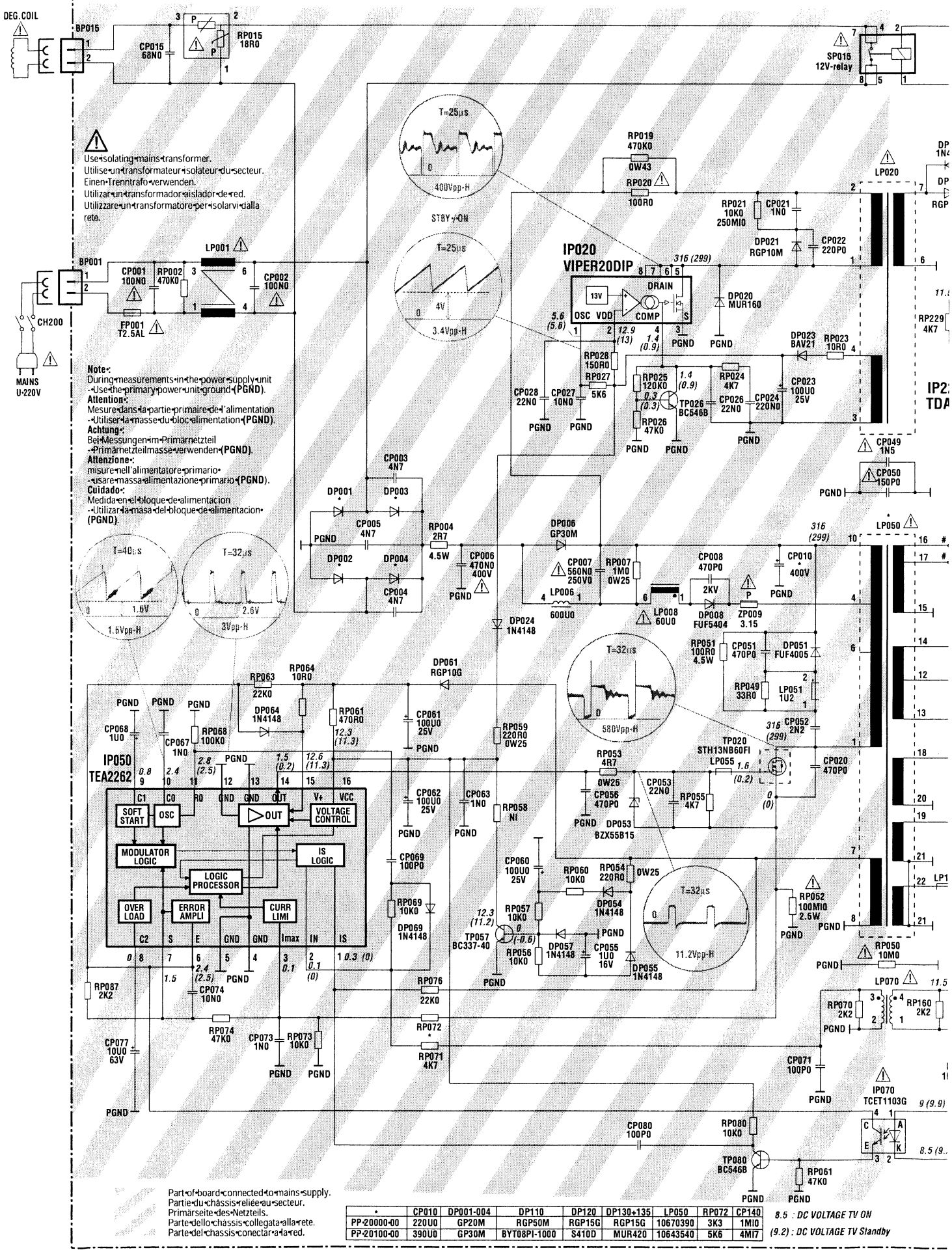

*	CP010	DP001-004	DP110	DP120	DP130+135	LP050	RP072	CP140
PP-20000-00	220U0	GP20M	RGP50M	RGP15G	RGP15G	10670390	3K3	1MI0
PP-20100-00	390U0	GP30M	BYT08PI-1000	S410D	MUR420	10643540	5K6	4MI7

8.5 : DC VOLTAGE TV ON
(9.2) : DC VOLTAGE TV Standby

ENKPLATINE - PIASTRA DEFLESSIONE / ALIMENTAZIONE - PLACA ALIMENTACIÓN / BARRIDOS ENTACIÓN

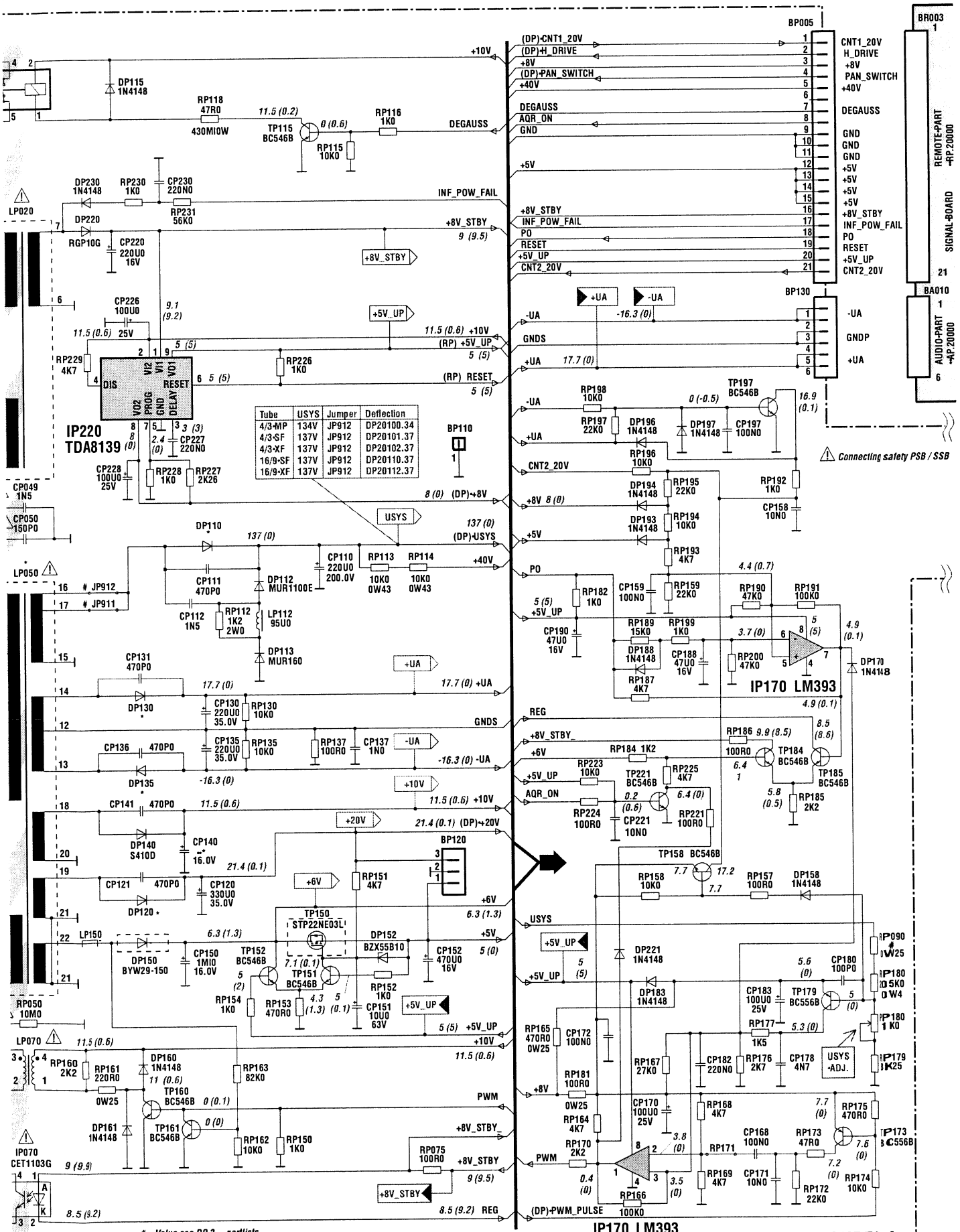

MAIN•SCHEMATIC•DIAGRAM•-•SCHEMA•DE•LA•PLATINE•PRINCIPALE•-•SCHALTBILD•HAUPTPLATINE•

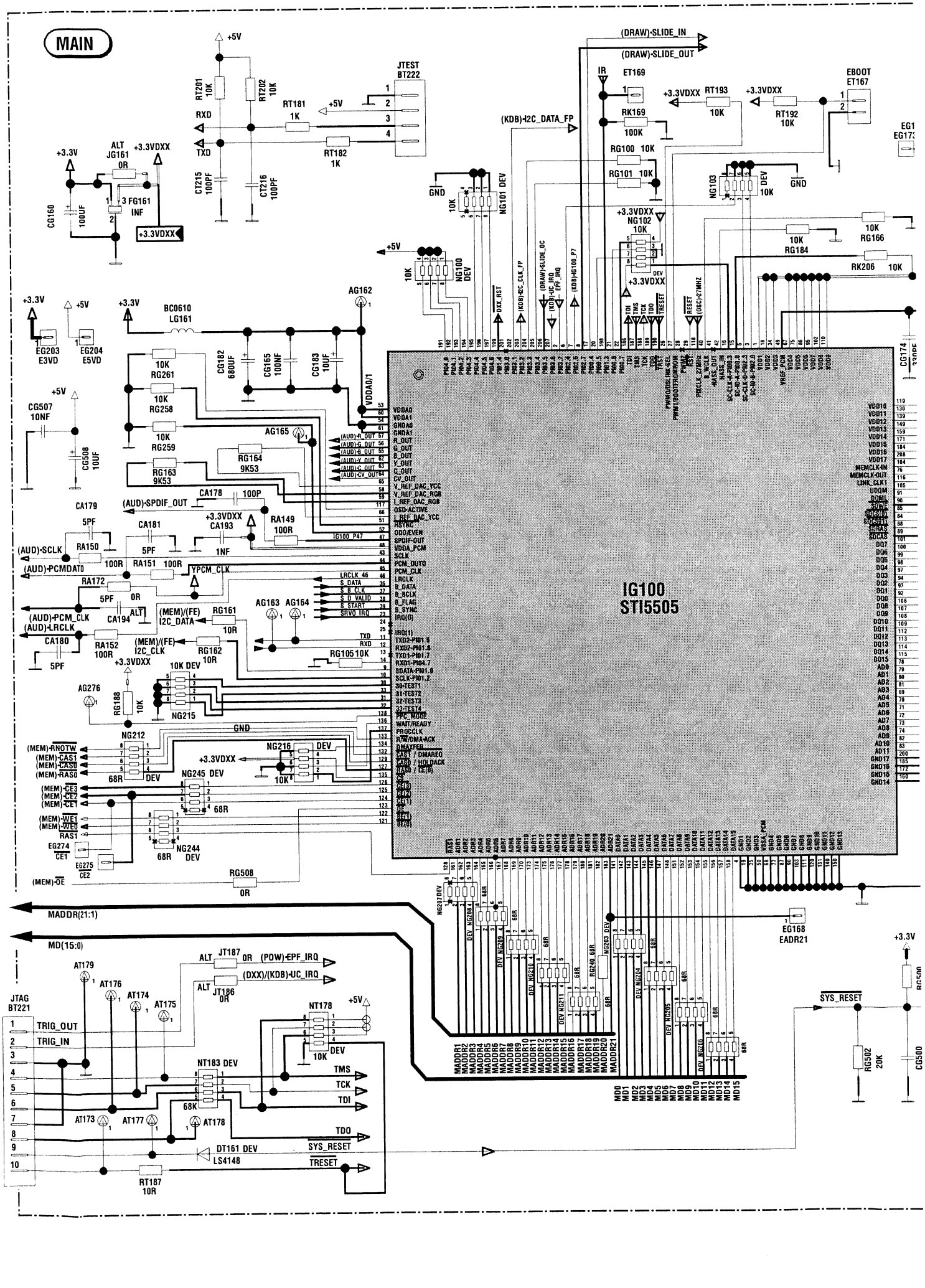

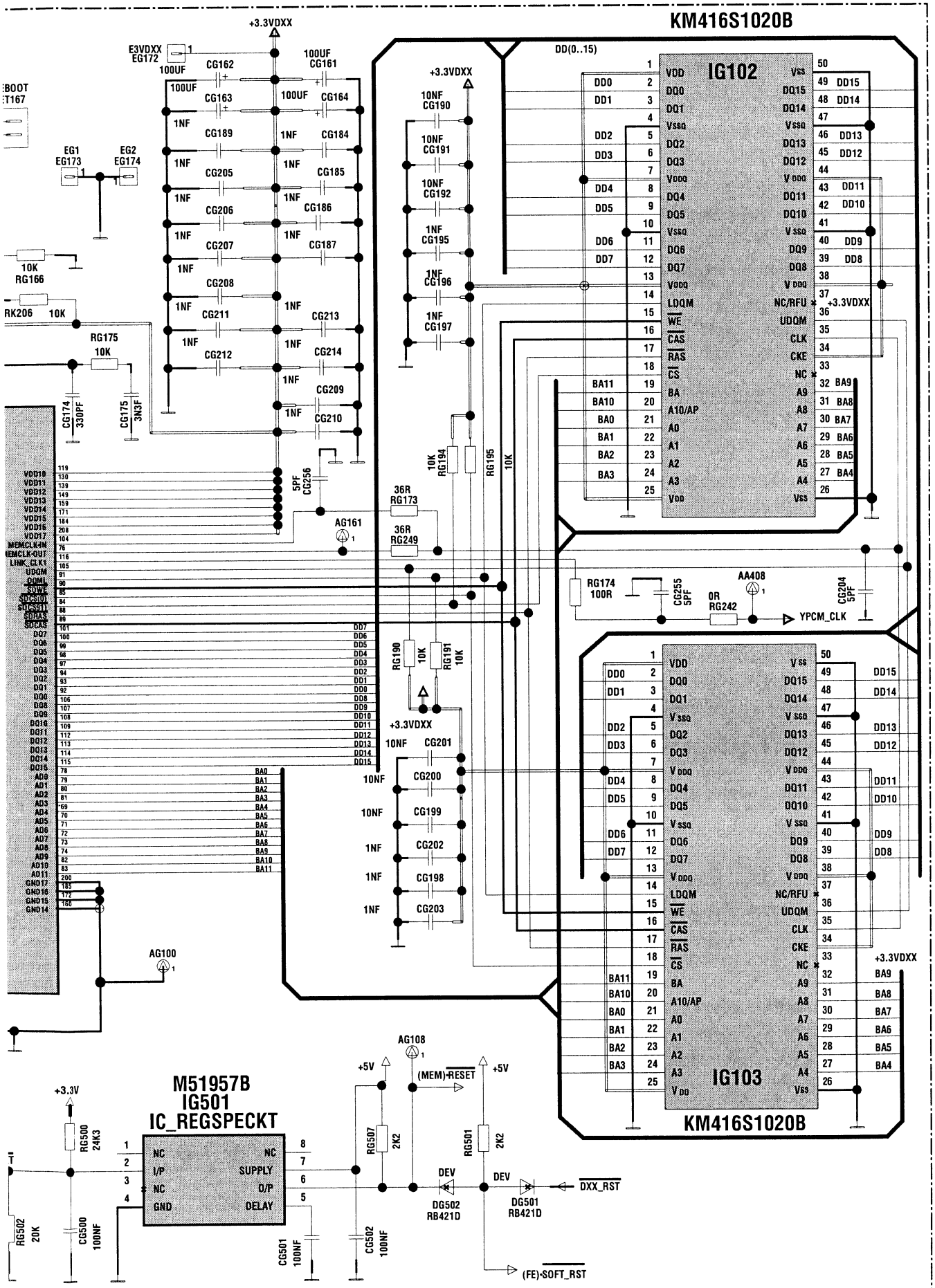
KM416S1020B
IG102
IG103
KM416S1020B
DD(0..15)
+3.3VDXX
E3VDXX EG172
EG1 EG173
EG2 EG174
100UF CG162
100UF CG163
100UF CG161
100UF CG164
1NF CG189
1NF CG184
1NF CG205
1NF CG185
1NF CG206
1NF CG186
1NF CG207
1NF CG187
1NF CG208
1NF CG211
1NF CG213
1NF CG212
1NF CG214
1NF CG209
1NF CG210
10NF CG190
10NF CG191
10NF CG192
1NF CG195
1NF CG196
1NF CG197
10K RG166
RK206 10K
RG175 10K
CG174 330PF
CG175 3N3F
5PF CG256
36R RG173
36R RG249
AG161
10K RG194
RG195 10K
RG174 100R
CG255 5PF
0R RG242
AA408
CG204 5PF
YPCM_CLK
RG190 10K
RG191 10K
10NF CG201
10NF CG200
10NF CG199
1NF CG202
1NF CG198
1NF CG203
AG100
AG108
M51957B
IG501
IC_REGSPECKT
RG500 24K3
RG502 20K
CG500 100NF
CG501 100NF
CG502 100NF
RG507 2K2
RG501 2K2
(MEM)-RESET
DEV
DG502 RB421D
DG501 RB421D
DXX_RST
(FE)-SOFT_RST

(DXX)

MAIN•SCHEMATIC•DIAGRAM•-•SCHEMA•DE•LA•PLATINE•PRINCIPALE•-•SCHALTBILD•HAUPTPLATINE•-•SCHEMA•DELLA•PIASTRA•PRINCIPALE-•ESQUEMA•DE•LA•PLATINA•PRINCIPAL•••

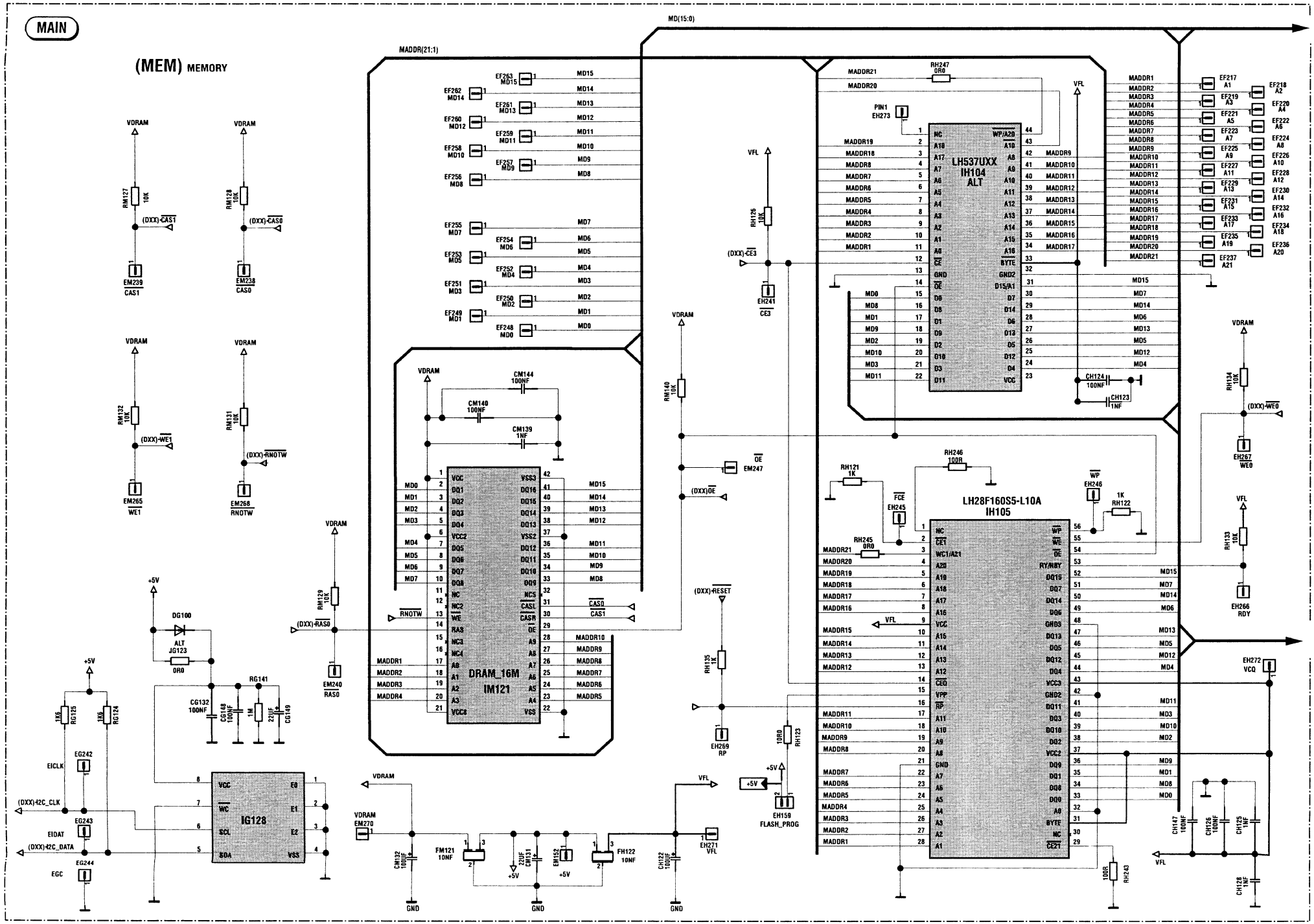

MAIN SCHEMATIC DIAGRAM - SCHEMA DE LA PLATINE PRINCIPALE - SCHALTBILD HAUPTPLATINE - SCHEMA DELLA PIASTRA PRINCIPALE- ESQUEMA DE LA PLATINA PRINCIPAL

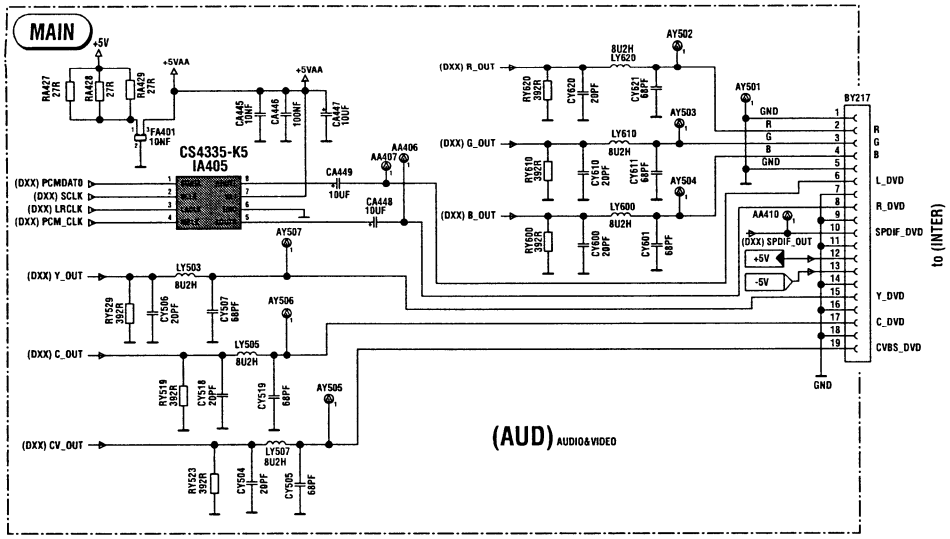

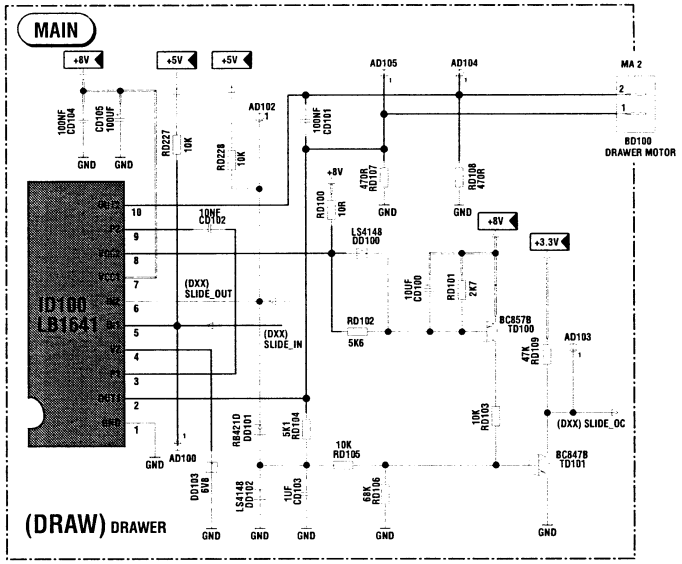

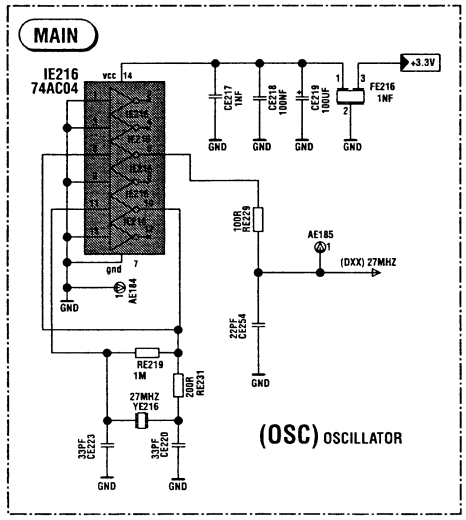

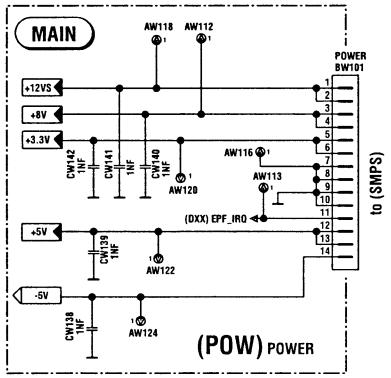

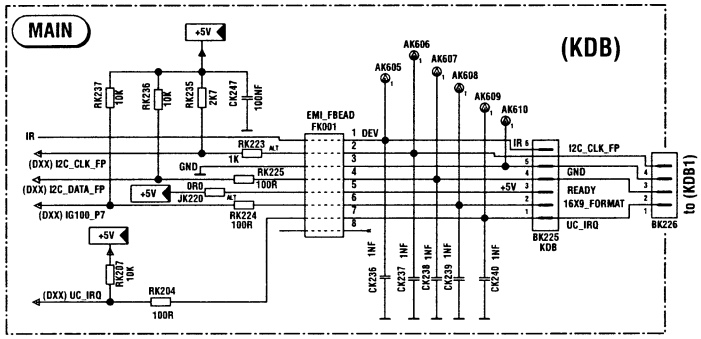

KEYBOARD SCHEMATIC DIAGRAM - SCHEMA DES CIRCUITS COMMANDES - SCHALTBILD BEDIENTEIL - SCHEMA DEI CIRCUITI TASTIERA - ESQUEMA DE LOS CIRCUITOS MANDOS

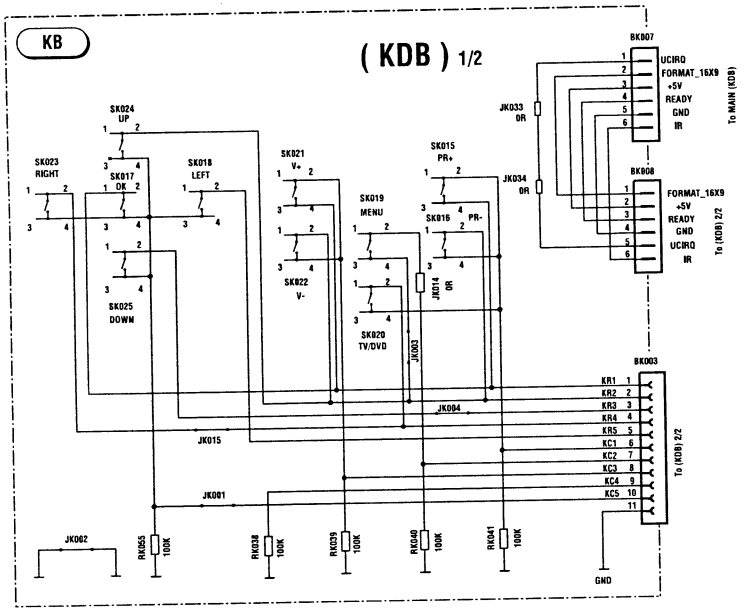

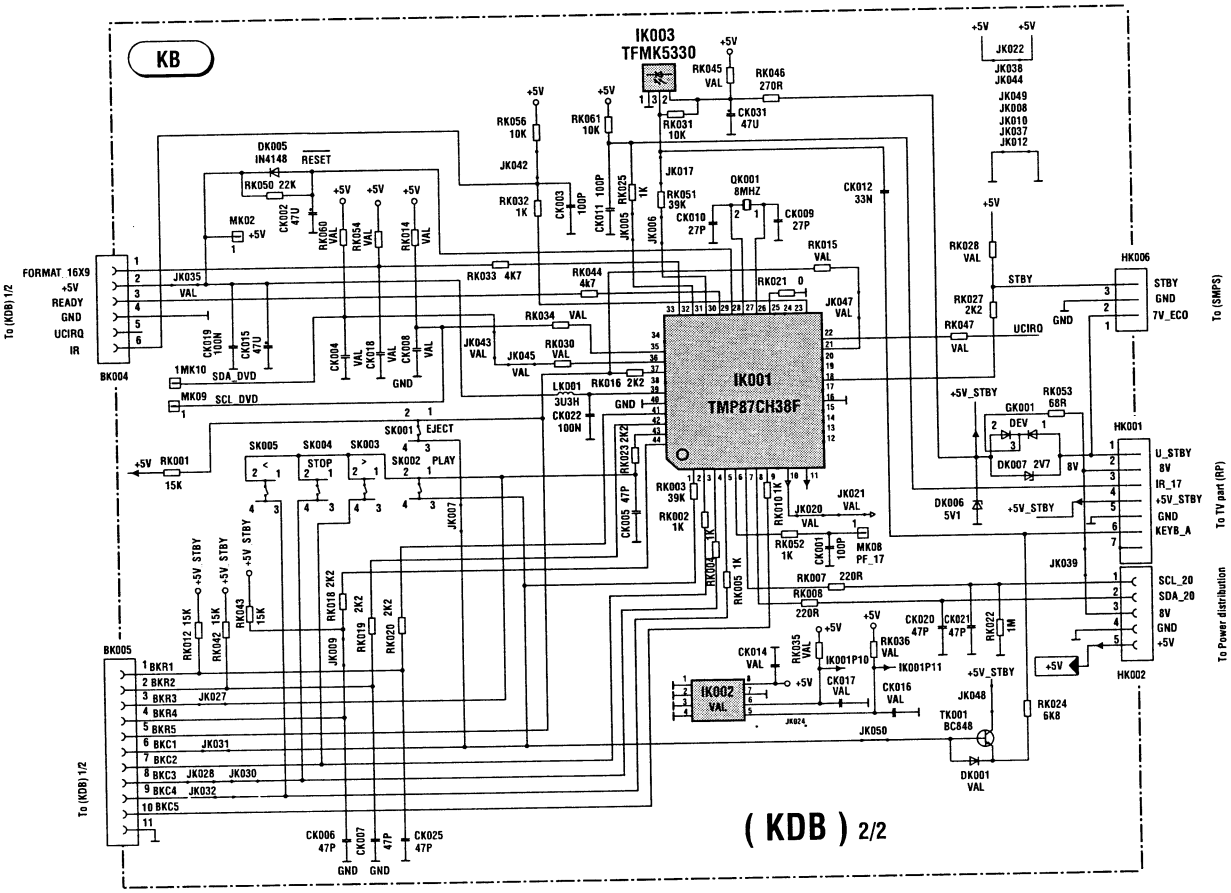

POWER SUPPLY SCHEMATIC DIADIAGRAM SCHEMA DES CIRCUITS D'ALIMENTATIONS - SCHALTBILD NETZTEIL - SCHEMA DEI CIRCUITI DI ALIMENTAZIONE - ESQUEMA DE LOS CIRCUITOS DE ALIMENTACIÓN

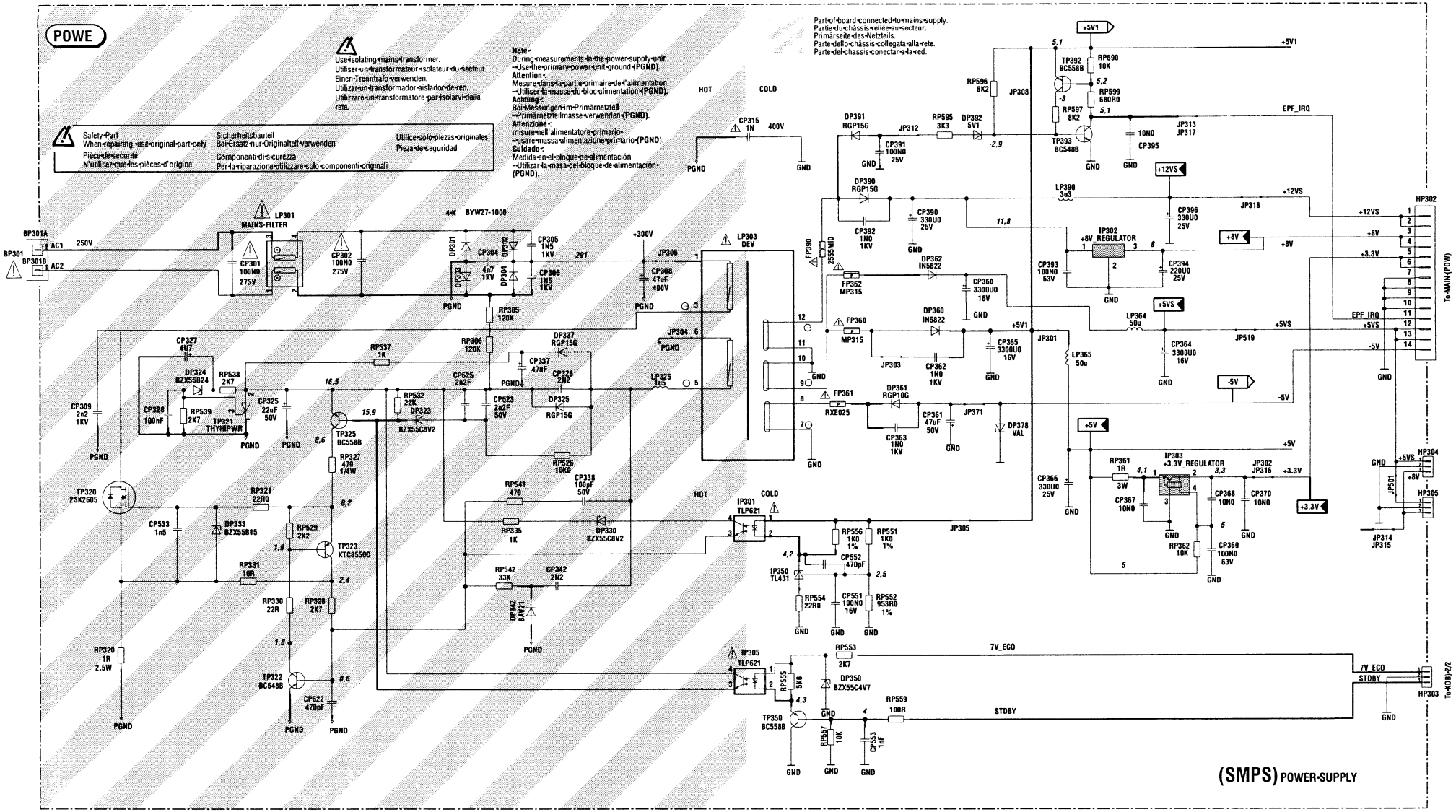

TP320 (Drain)

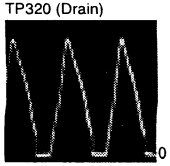

T=15µs 680Vpp

TP320 (Gate)

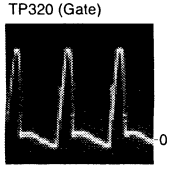

T=15µs 12Vpp

SMALL SIGNAL BOARD - PLATINE PETITS SIGNAUX - SIGNAL-PLATINE - PIASTRA PICCOLI SEGNALI - PLACA PEQUEÑA SEÑAL
FRONTEND PART (2) - EINGANGSSTUFEN (2) - PRESE FRONTALI (2) - FRONT END PART (2)

SCART INTERFACE - INTERFACE PERITELEVISION - SCART INTERFACE - PRESA PERITEL- EUROCONECTOR

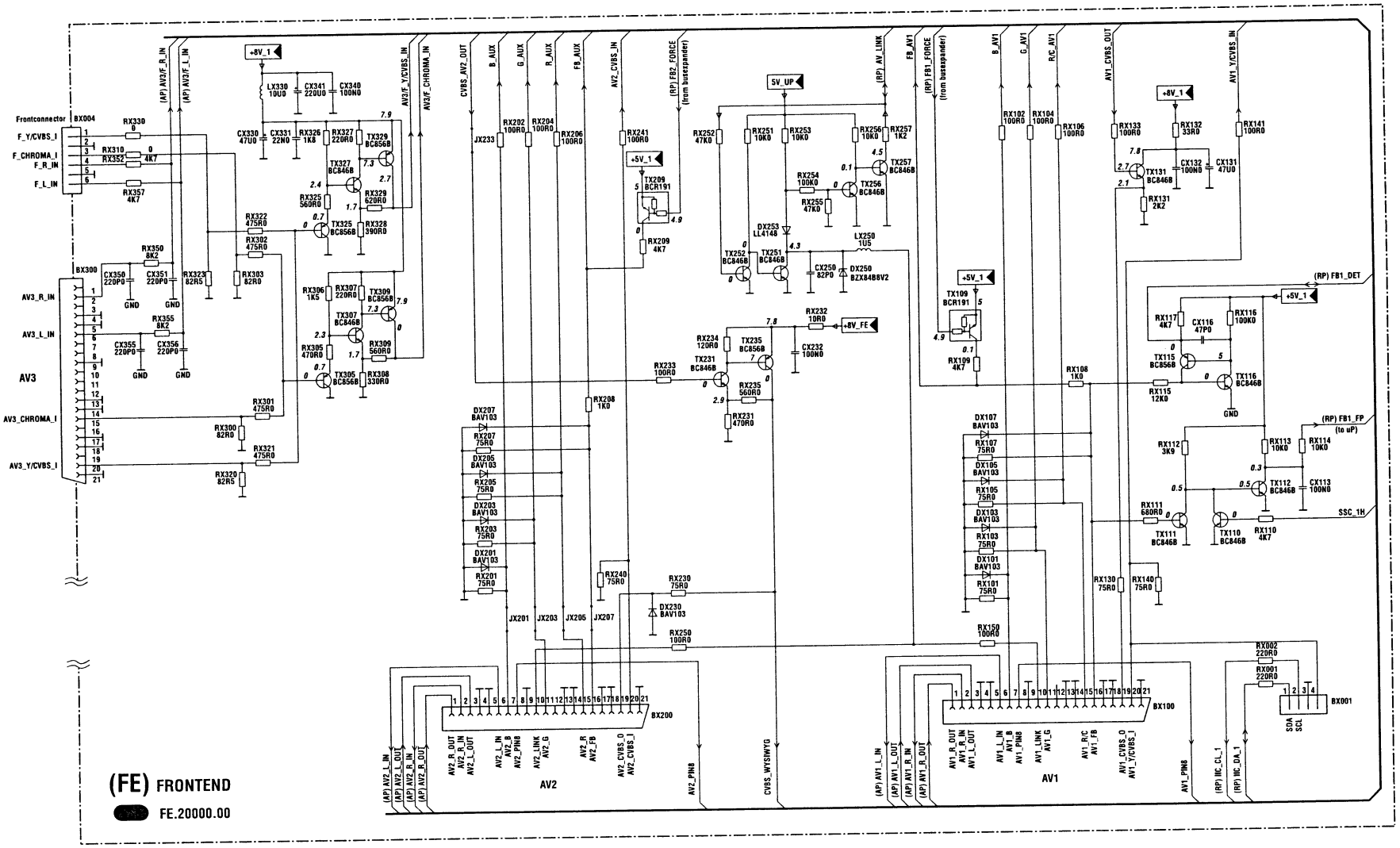

VHF / UHF TUNER CTT5010 (For information only)

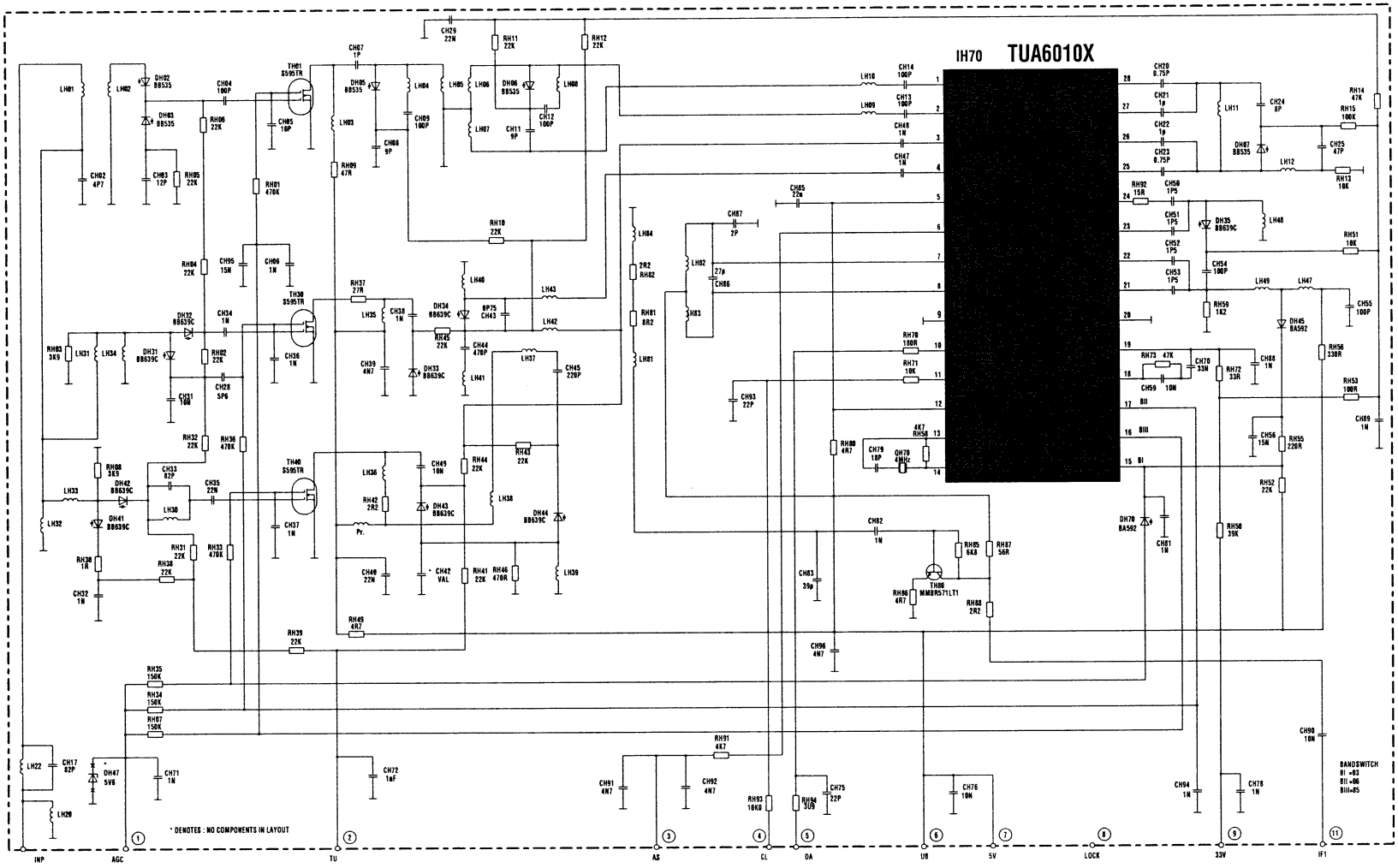

SMALL SIGNAL BOARD - PLATINE PETITS SIGNAUX - SIGNAL-PLATINE - PIASTRA PICCOLI SEGNALI - PLACA PEQUEÑA SEÑAL
REMOTE / MICROCONTROLLER - GESTION / MICROCONTROLEUR - FERNBEDIENUNGS- UND MICROCONTROLLERSTUFEN - MICROPROCESSORE - REMOTO / MICROCONTROLADOR

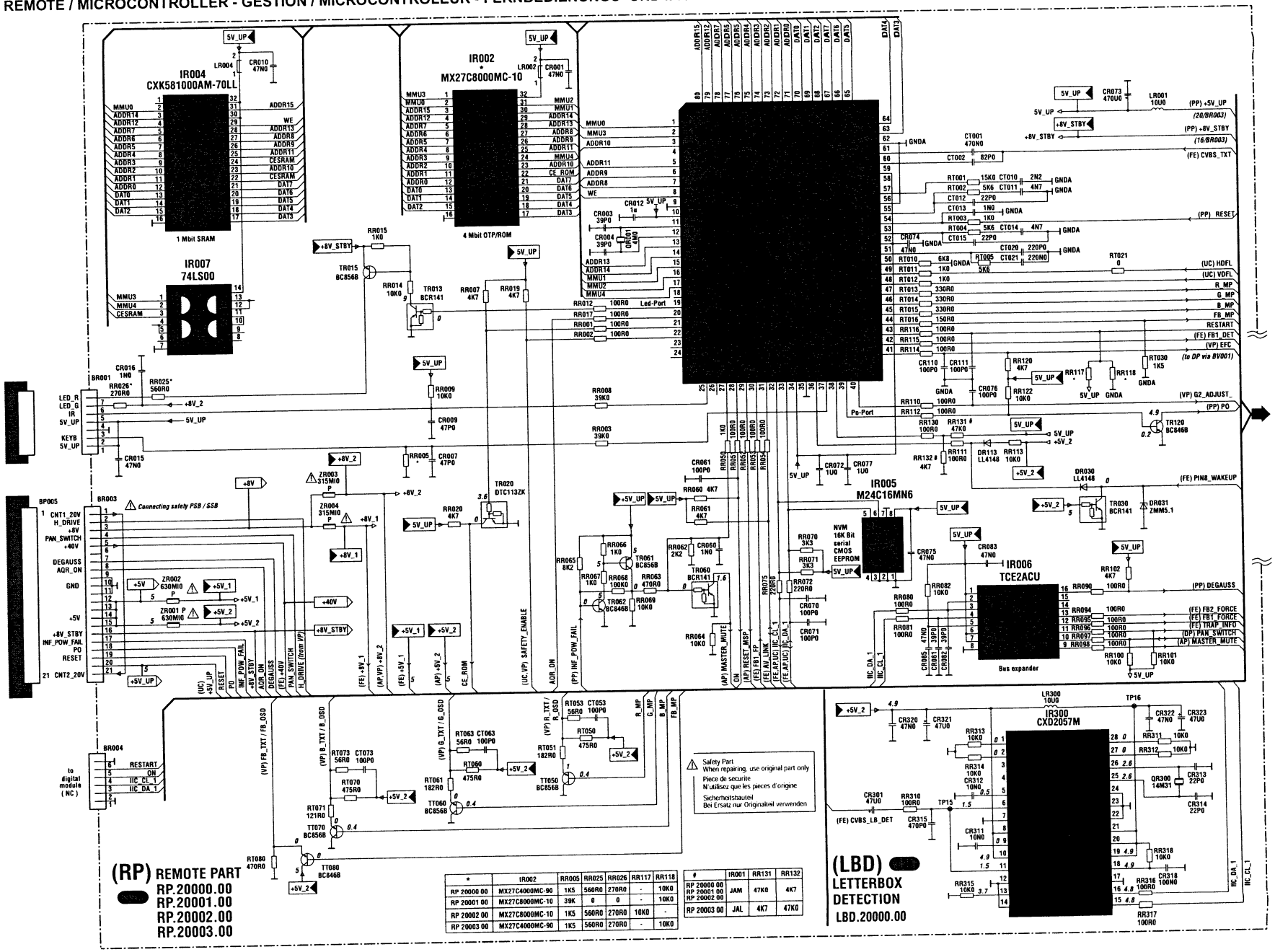

*	IR002	RR005	RR025	RR026	RR117	RR118
RP 20000 00	MX27C4000MC-90	1K5	560R0	270R0	-	10K0
RP 20001 00	MX27C8000MC-10	39K	0	0	-	10K0
RP 20002 00	MX27C8000MC-10	1K5	560R0	270R0	10K0	-
RP 20003 00	MX27C4000MC-90	1K5	560R0	270R0	-	10K0

#	IR001	RR131	RR132
RP 20000 00 RP 20001 00 RP 20002 00	JAM	47K0	4K7
RP 20003 00	JAL	4K7	47K0

VIDEO AMPLIFIER BOARD - PLATINE AMPLIFICATEURS VIDEO - VIDEOVERSTÄRKERPLATTE - PIASTRA AMPLIFICATORE VIDEO - PLATINA AMPLIFICADOR VIDEO
CRT 20000.00 - CRT BS20100.00

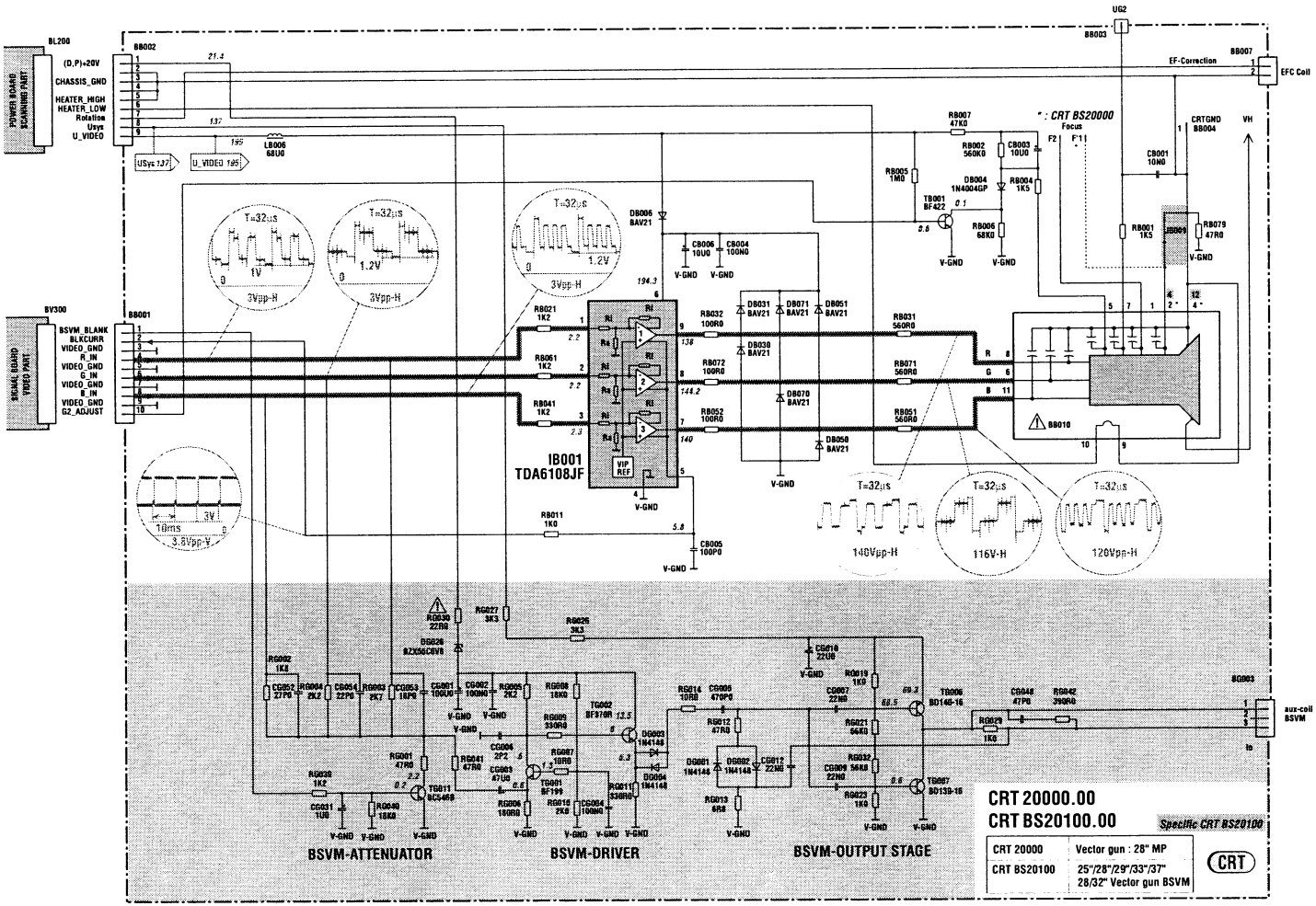

POWER / SCAN BOARD - PLATINE ALIMENTATION / BALAYAGE - NETZTEIL- UND ABLENKPLATINE - PIASTRA DEFLESSIONE / ALIMENTAZIONE - PLACA ALIMENTACIÓN / BARRIDOS

POWER SUPPLY PART - PARTIE ALIMENTATION - NETZTEIL - ALIMENTAZIONE - ALIMENTACIÓN

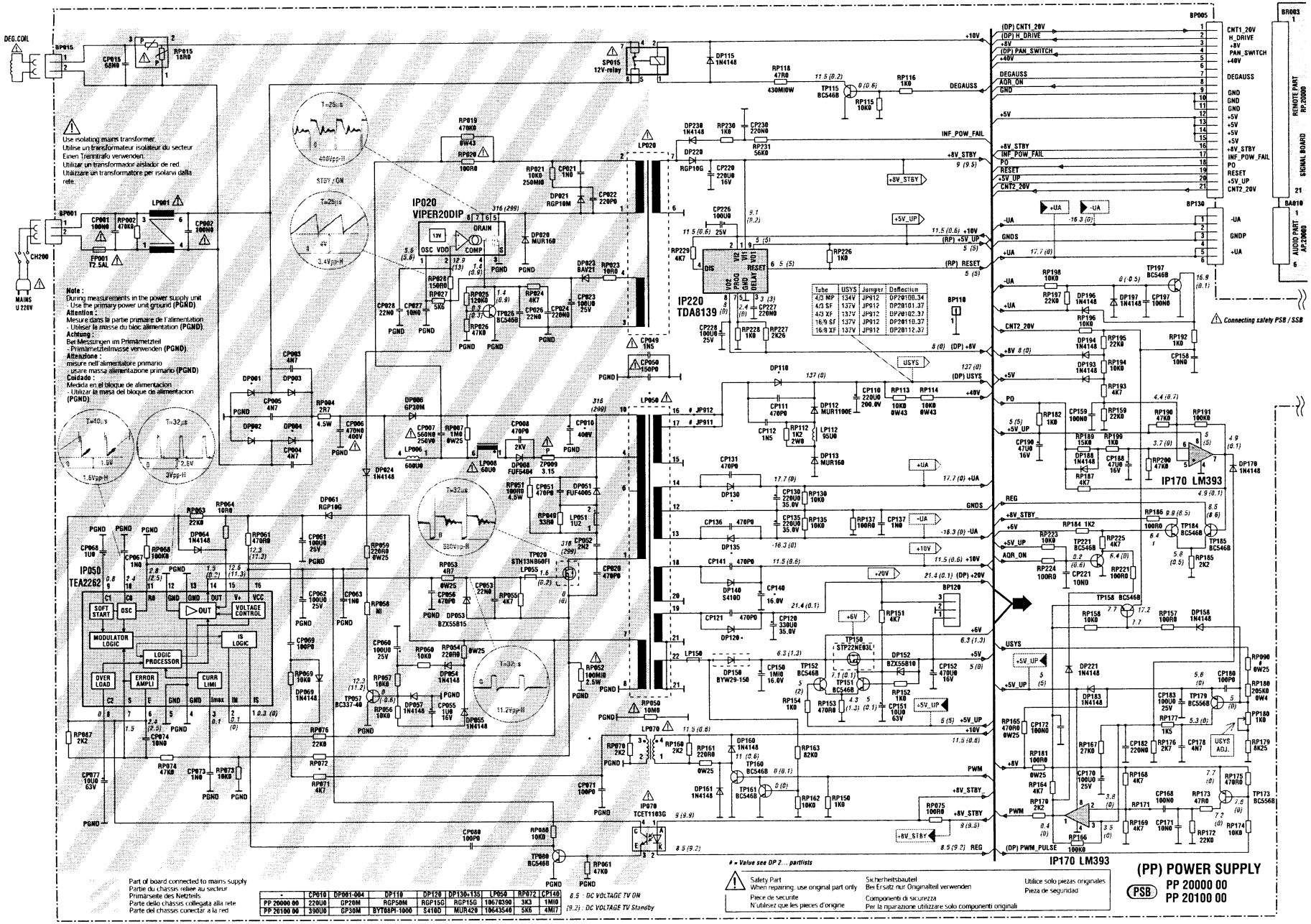

POWER / SCAN BOARD - PLATINE ALIMENTATION / BALAYAGE - NETZTEIL- UND ABLENKPLATINE - PIASTRA DEFLESSIONE / ALIMENTAZIONE - PLACA ALIMENTACIÓN / BARRIDOS

POWER SUPPLY PART - PARTIE ALIMENTATION - NETZTEIL - ALIMENTAZIONE - ALIMENTACIÓN

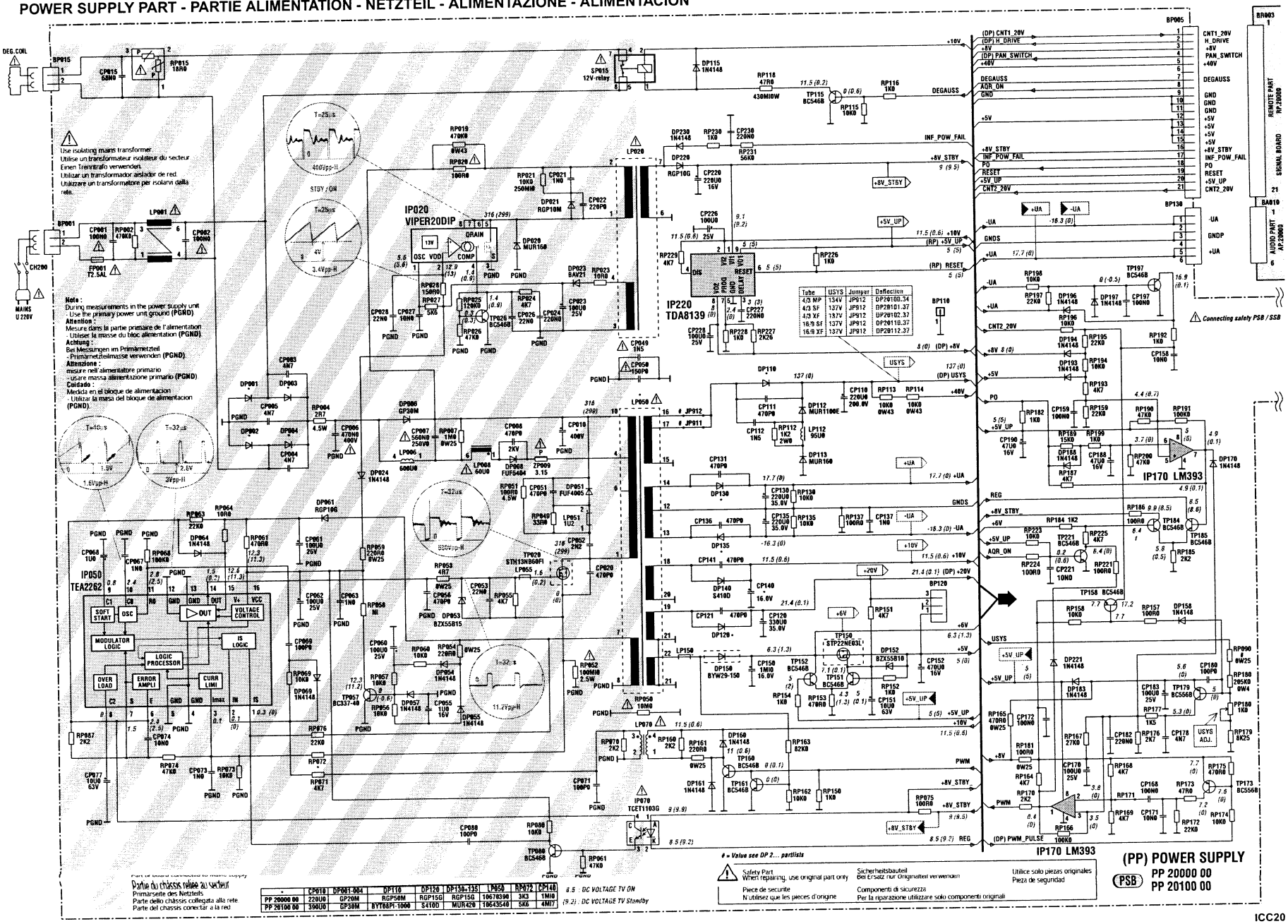

POWER / SCAN BOARD - PLATINE ALIMENTATION / BALAYAGE - NETZTEIL- UND ABLENKPLATINE - PIASTRA DEFLESSIONE / ALIMENTAZIONE - PLACA ALIMENTACIÓN / BARRIDOS
SCANNING - BALAYAGE - ABLENKUNG - BARRIDO - SCANSIONE

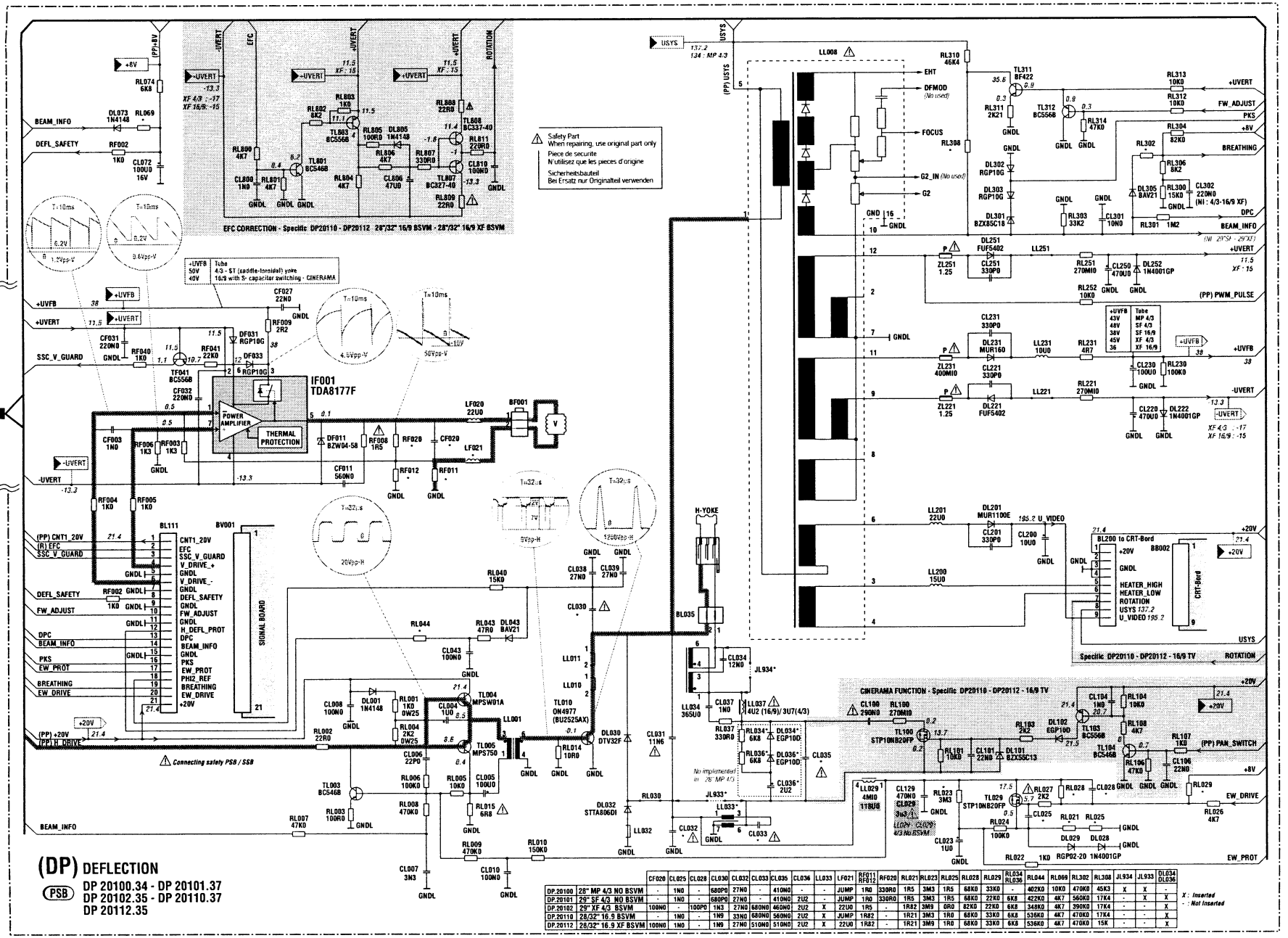

	CF020	CL025	CL028	CL030	CL032	CL033	CL035	CL036	LL033	LF021	RF011 RF012	RF020	RL021	RL023	RL025	RL028	RL029	RL034 RL036	RL044	RL069	RL302	RL308	JL934	JL933	DL034 DL036
DP.20100	28" MP 4/3 NO BSVM	-	1N0	-	680P0	27N0	-	410N0	-	-	JUMP	1R0	330R0	1R5	3M3	1R5	68K0	33K0	-	402K0	10K0	470K0	45K3	X	X	-
DP.20101	29" SF 4/3 NO BSVM	-	1N0	-	680P0	27N0	-	410N0	2U2	-	JUMP	1R0	330R0	1R5	3M3	1R5	68K0	22K0	6K8	422K0	4K7	560K0	17K4	-	X	X
DP.20102	29" XF 4/3 BSVM	100N0	-	100P0	1N3	27N0	680N0	460N0	2U2	X	22U0	1R5	-	1R82	3M9	0R0	82K0	22K0	6K8	348K0	4K7	390K0	17K4	-	-	X
DP.20110	28/32" 16:9 BSVM	-	1N0	-	1N9	33N0	680N0	560N0	2U2	X	JUMP	1R82	-	1R21	3M3	1R0	68K0	33K0	6K8	536K0	4K7	470K0	17K4	-	-	X
DP.20112	28/32" 16:9 XF BSVM	100N0	1N0	-	1N9	27N0	510N0	510N0	2U2	X	22U0	1R82	-	1R21	3M9	1R0	68K0	33K0	6K8	536K0	4K7	470K0	15K	-	-	X

X : Inserted
- : Not Inserted

POWER / SCAN BOARD - PLATINE ALIMENTATION / BALAYAGE - NETZTEIL- UND ABLENKPLATINE - PIASTRA DEFLESSIONE / ALIMENTAZIONE - PLACA ALIMENTACIÓN / BARRIDOS SCANNING - BALAYAGE - ABLENKUNG - BARRIDO - SCANSIONE

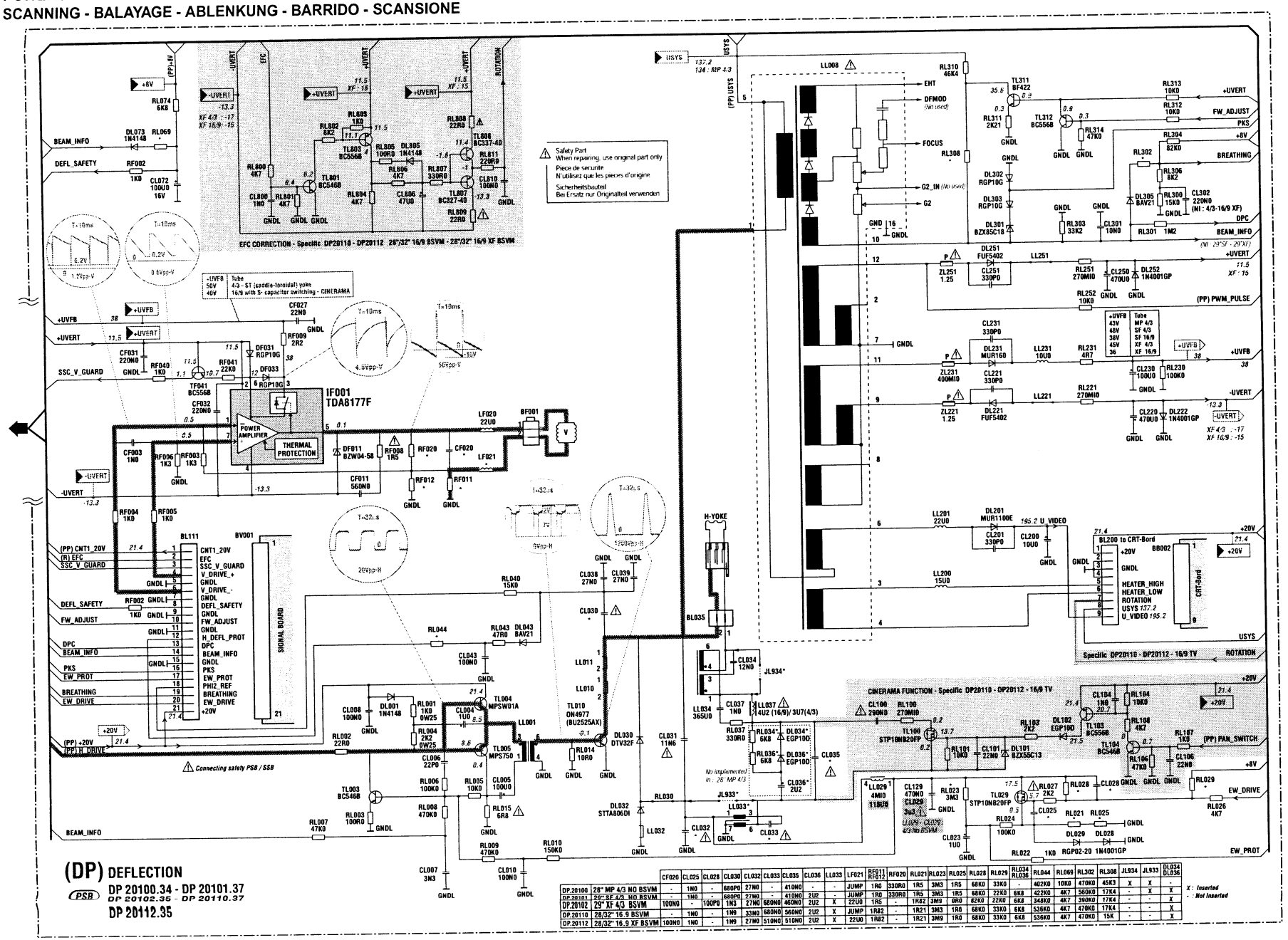

		CF020	CL025	CL028	CL030	CL032	CL033	CL035	CL036	LL033	LF021	RF011 RF012	RF020	RL021	RL023	RL025	RL028	RL029	RL034 RL036	RL044	RL069	RL302	RL308	JL934	JL933	DL034 DL036
DP.20100	28" MP 4/3 NO BSVM	-	1N0	-	680P0	27N0	-	410N0	-	-	JUMP	1R0	330R0	1R5	3M3	1R5	68K0	33K0	-	402K0	10K0	470K0	45K3	X	-	-
DP.20101	29" SF 4/3 NO BSVM	-	1N0	-	680P0	27N0	-	410N0	2U2	-	JUMP	1R0	330R0	1R5	3M3	1R5	68K0	22K0	6K8	422K0	4K7	560K0	17K4	-	X	X
DP.20102	29" XF 4/3 BSVM	100N0	-	100P0	1N3	27N0	680N0	460N0	2U2	X	22U0	1R5	-	1R82	3M9	0R0	82K0	22K0	6K8	348K0	4K7	390K0	17K4	-	-	X
DP.20110	28/32" 16.9 BSVM	-	1N0	-	1N9	33N0	680N0	560N0	2U2	X	JUMP	1R82	-	1R21	3M3	1R0	68K0	33K0	6K8	536K0	4K7	470K0	17K4	-	-	X
DP.20112	28/32" 16.9 XF BSVM	100N0	1N0	-	1N9	27N0	510N0	510N0	2U2	X	22U0	1R82	-	1R21	3M9	1R0	68K0	33K0	6K8	536K0	4K7	470K0	15K	-	-	X

X : Inserted
- : Not inserted

SMALL SIGNAL BOARD - PLATINE PETITS SIGNAUX - SIGNAL-PLATINE - PIASTRA PICCOLI SEGNALI - PLACA PEQUEÑA SEÑAL
UPCONVERTER PART - PARTIE CONVERSION - UPCONVERTER STUFEN - CIRCUITO UPCONVERTER - SUPRACONVERSOR

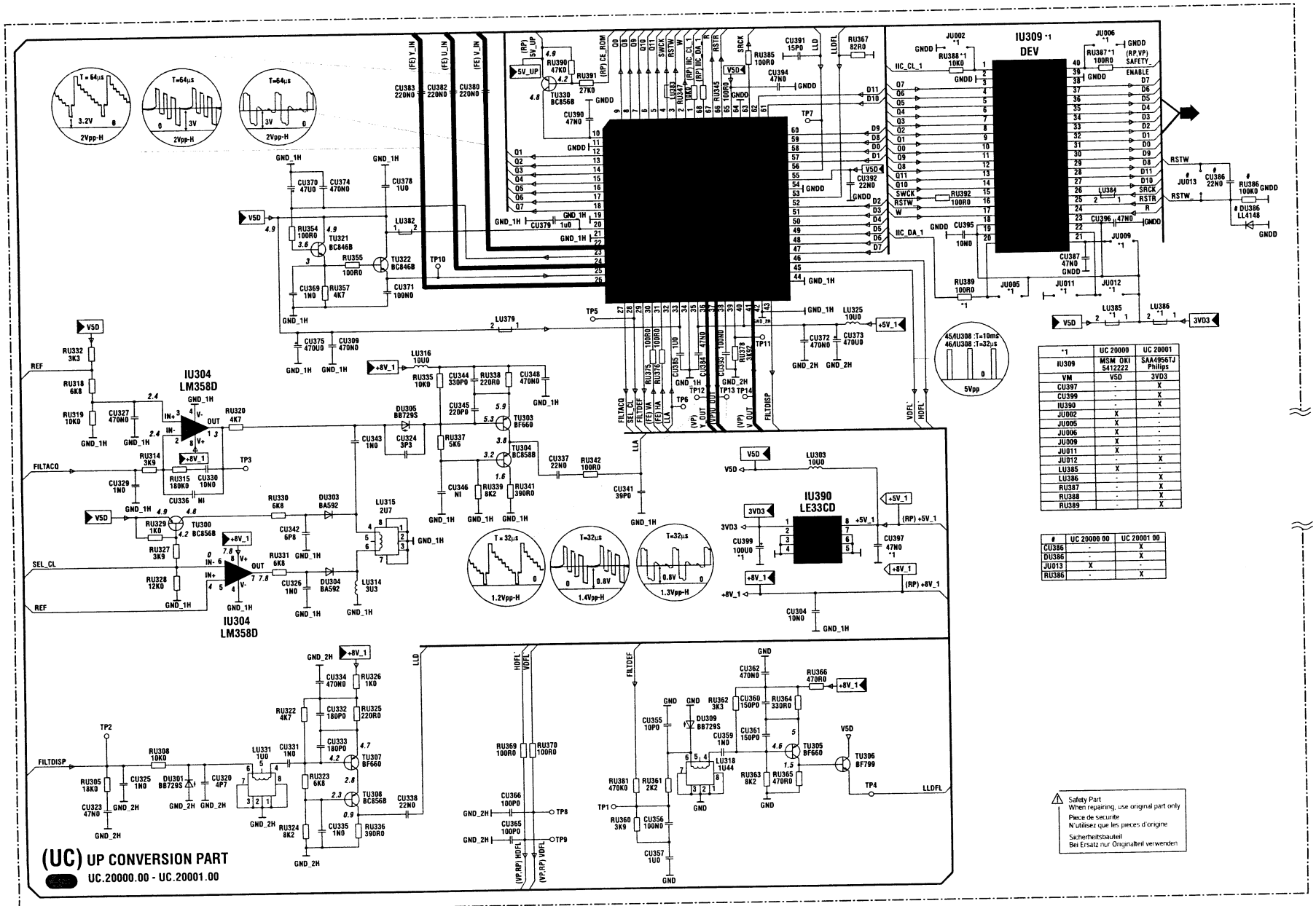

*1	UC 20000	UC 20001
IU309	MSM OKI 5412222	SAA4956TJ Philips
VM	V5D	3VD3
CU397	-	X
CU399	-	X
IU390	-	X
JU002	X	-
JU005	X	-
JU006	X	-
JU009	X	-
JU011	X	-
JU012	-	X
LU385	X	-
LU386	-	X
RU387	-	X
RU388	-	X
RU389	-	X

#	UC 20000 00	UC 20001 00
CU386	-	X
DU386	-	X
JU013	X	-
RU386	-	X

SMALL SIGNAL BOARD - PLATINE PETITS SIGNAUX - SIGNAL-PLATINE - PIASTRA PICCOLI SEGNALI - PLACA PEQUEÑA SEÑAL
VIDEO PART - PARTIE VIDEO - VIDEO-SIGNALVERARBEITUNG - ELABORAZIONE VIDEO - TRATAMENTO VIDEO

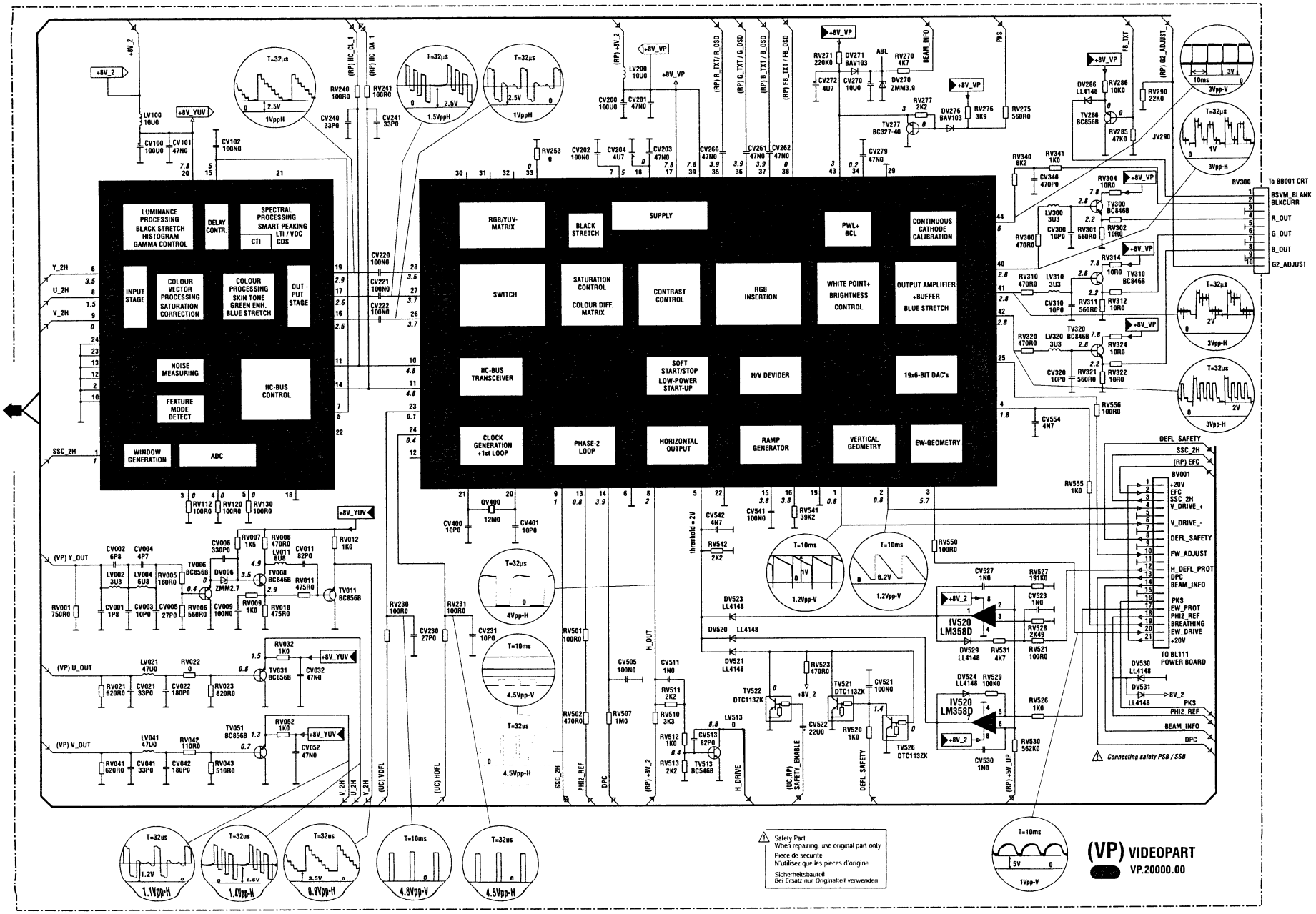

ICC20
First issue 05 / 00

SMALL SIGNAL BOARD - PLATINE PETITS SIGNAUX - SIGNAL-PLATINE - PIASTRA PICCOLI SEGNALI - PLACA PEQUEÑA SEÑAL
FRONTEND PART (1) - EINGANGSSTUFEN (1) - PRESE FRONTALI (1) - FRONT END PART (1)

RF/FI / VIDEO SIGNAL PROCESSING - HF/FI / TRAITEMENT LUMINANCE CHROMINANCE - HF-, ZF- UND VIDEO-SIGNALVERARBEITUNG - RF/FI / ELABORAZIONE SEGNALE VIDEO - RF/FI / TRATAMENTO SEÑAL VIDEO

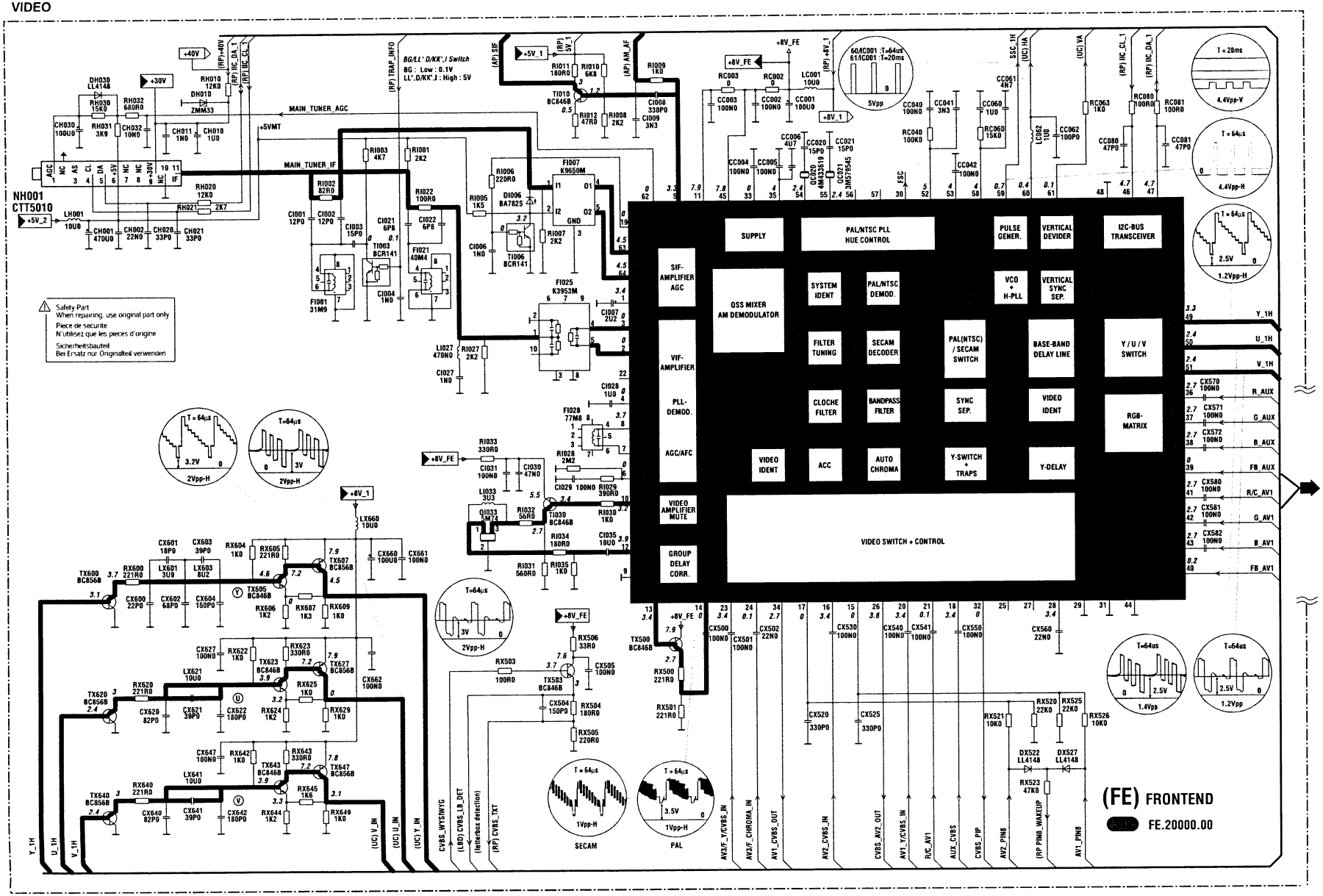

SMALL SIGNAL BOARD - PLATINE PETITS SIGNAUX - SIGNAL-PLATINE - PIASTRA PICCOLI SEGNALI - PLACA PEQUEÑA SEÑAL
AUDIO PART - PARTIE AUDIO - AUDIOSTUFEN - CIRCUITO AUDIO - AUDIO

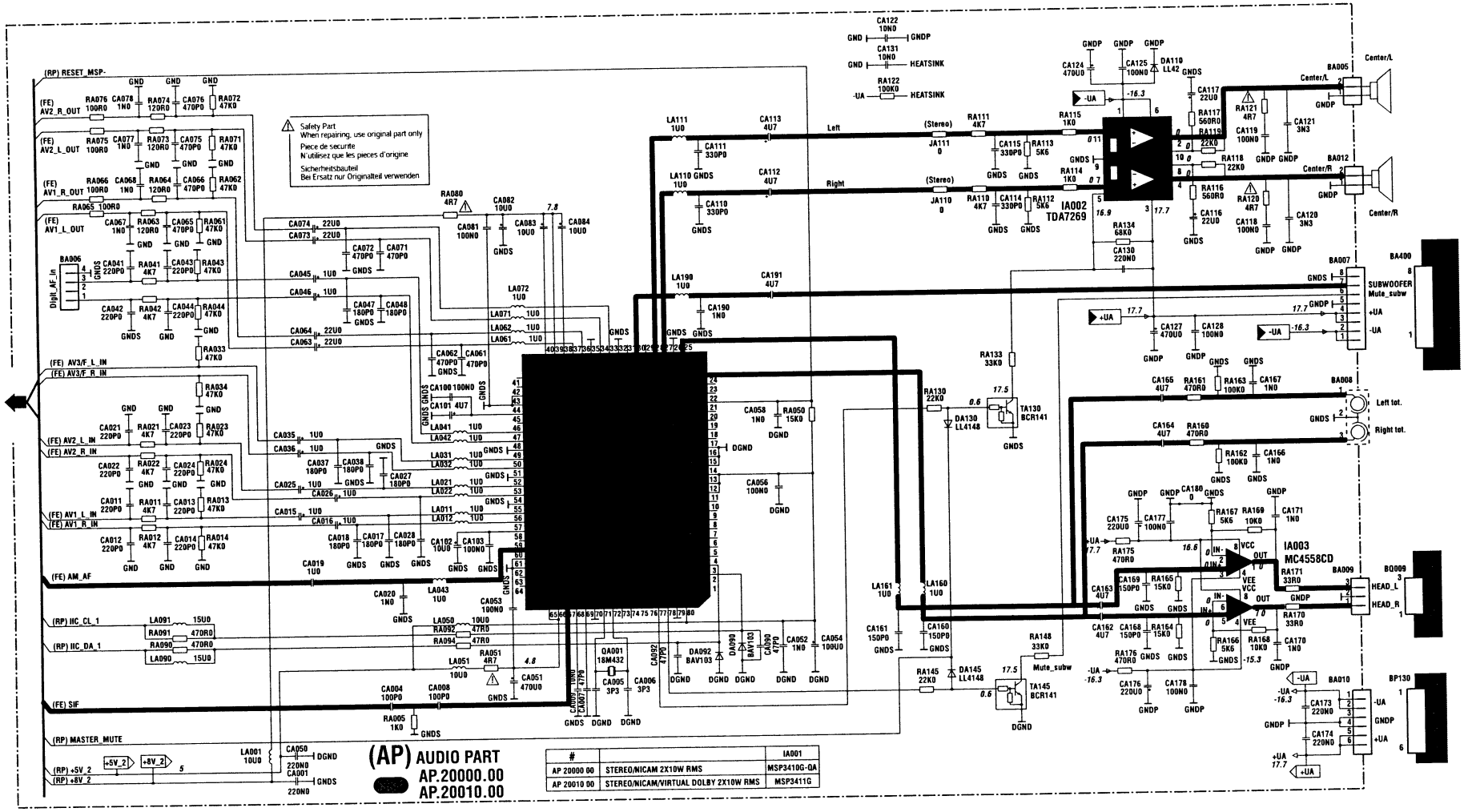

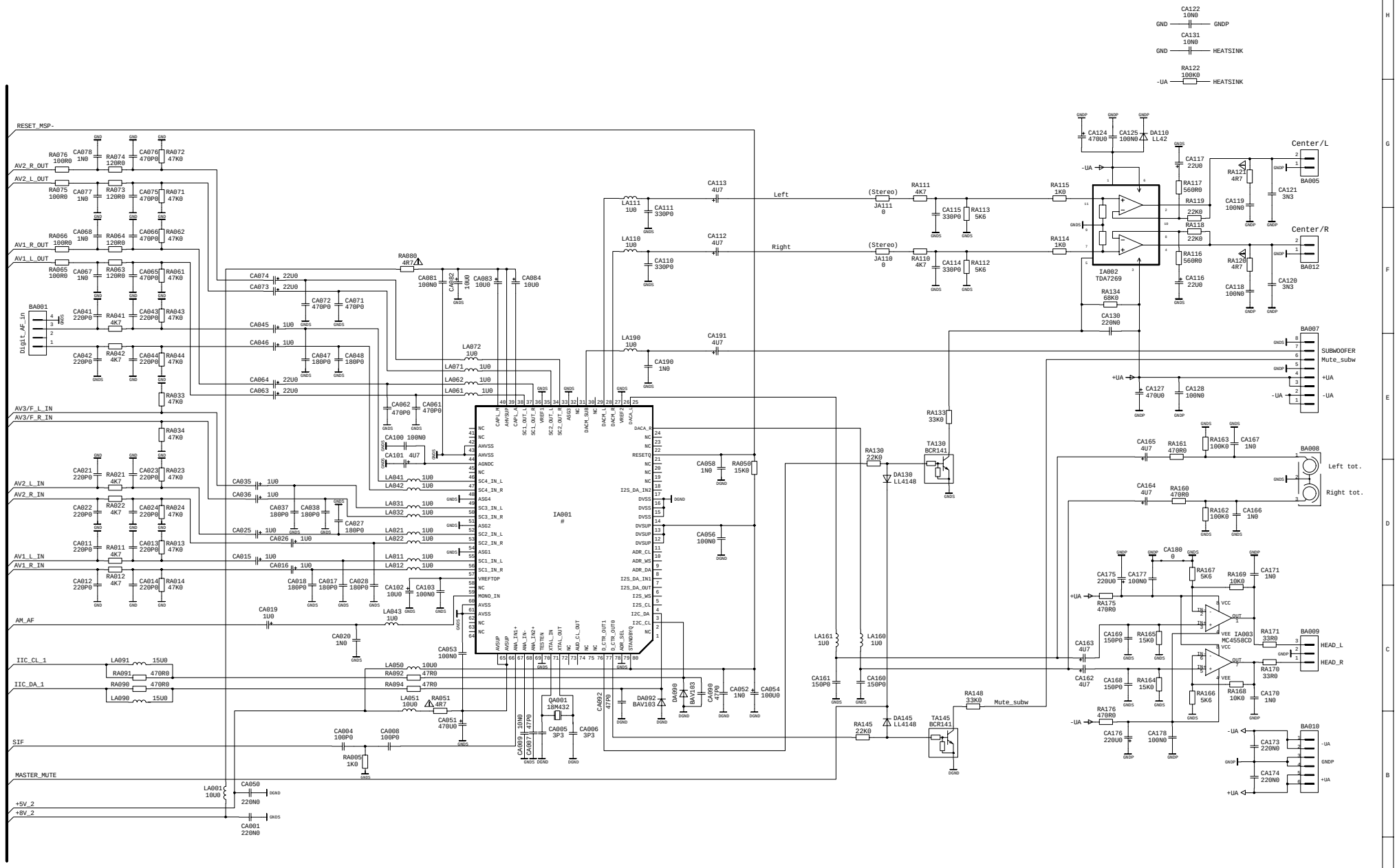

#	IA001
AP 20000 00	MSP3410G-QA
AP 20010 00	MSP3451G

⚠ Sicherheitsbauteil
Bei Ersatz nur Originalteil verwenden

⚠ Safety Part
When repairing, use original part only

⚠ Piece de securite
N'utilisez que les pieces d'origine

THOMSON MULTIMEDIA
tv product development europe
P.O.Box 1307 D-78003 Villingen Germany
Tel (49) 7721/85 03 Fax (49) 7721/852231

DEVELOPMENT DEPT: CTA_PEDUZZI

INDEX	DATE	NAME	DESCRIPTION
E	28.03.00	J.David	C36920
D	01.12.99	RIEDM.	CORRECTION
C	10.11.99	RIEDM.	C20630/29900 950/30220/270
B	23.08.99	RIEDM.	NR.ADDED 06L2-CORR.
A	11.06.99	RIEDM.	06L1-CORR.

DRAWN
ON: 10.03.99
BY: RIEDM.
CHECKED
ON:
BY:

DESIGNATION	TOCOM-NUMBER
AP.20000.00	10623730
AP.20010.00	10623930

TV
IC20
PAGE: 1
OF : 1

PCAD FORMAT DIN A1

THIS DRAWING CANNOT BE COMMUNICATED TO UNAUTHORIZED PERSONS COPIED UNLESS PERMITTED IN WRITING

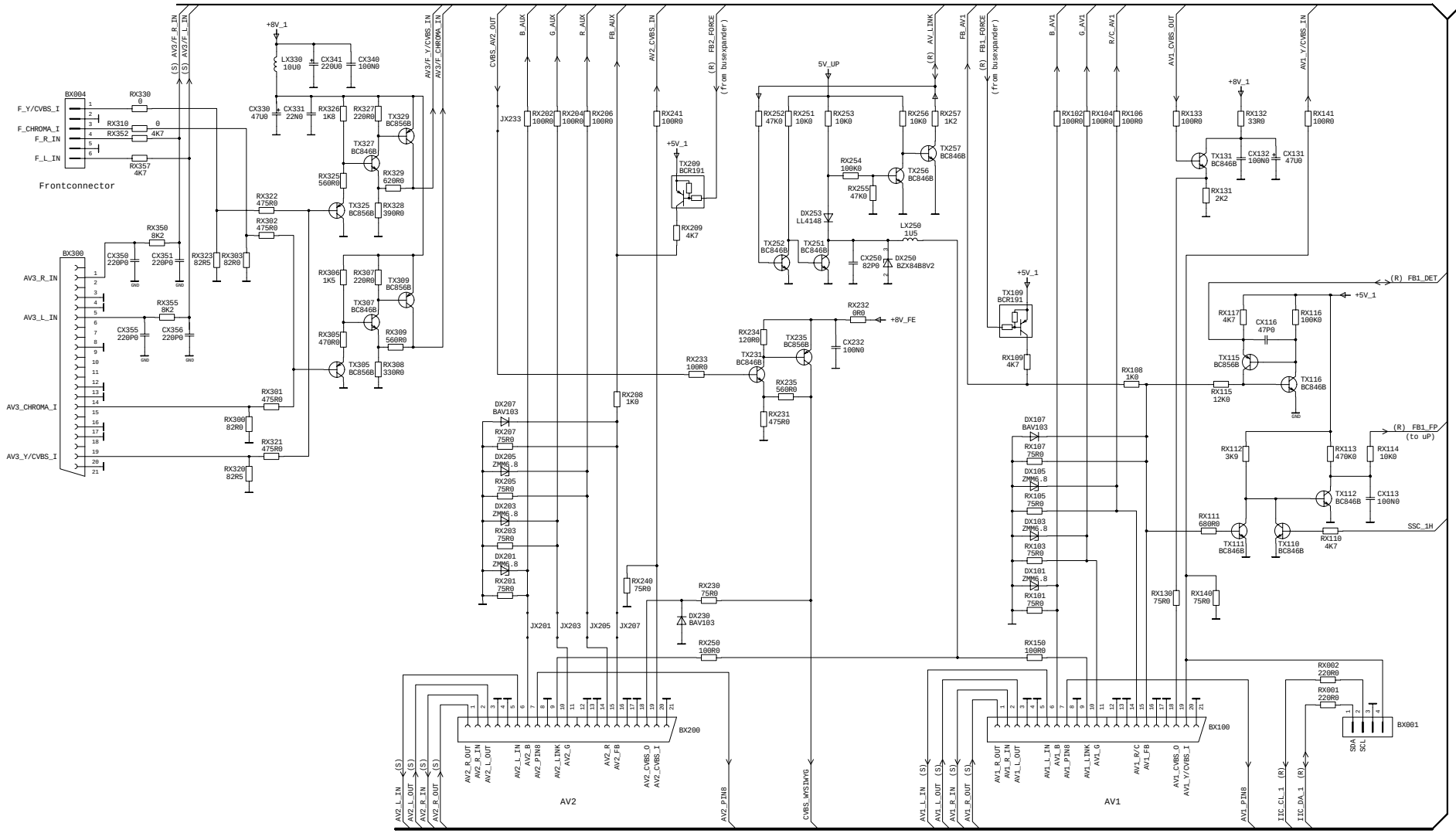

THIS DRAWING CANNOT BE COMMUNICATED TO UNAUTHORIZED PERSONS COPIED UNLESS PERMITTED IN WRITING

THOMSON MULTIMEDIA tv product development europe P.O.Box 1307 D-78003 Villingen Germany Tel (49) 7721/85 03 Fax (49) 7721/852231					DRAWN ON: 11.03.99 BY: RIEDM. CHECKED ON: BY:	DESIGNATION	TOCOM-NUMBER	TV IC20
DEVELOPMENT DEPT: CTV_MIKA						FE.20000.00	10624110 00	PAGE: 1 OF : 3
	INDEX	DATE	NAME	DESCRIPTION				
	E	07.02.00	RIEDM.	C31330/34500				
	D	18.11.99	RIEDM.	C20630/29200 C25170 C25660				
	H	04.06.99	J.David	C34650				
	G	31.03.99	J.David	C37700				
	F	27.03.00	J.David	C37100				

PCAD FORMAT DIN A1

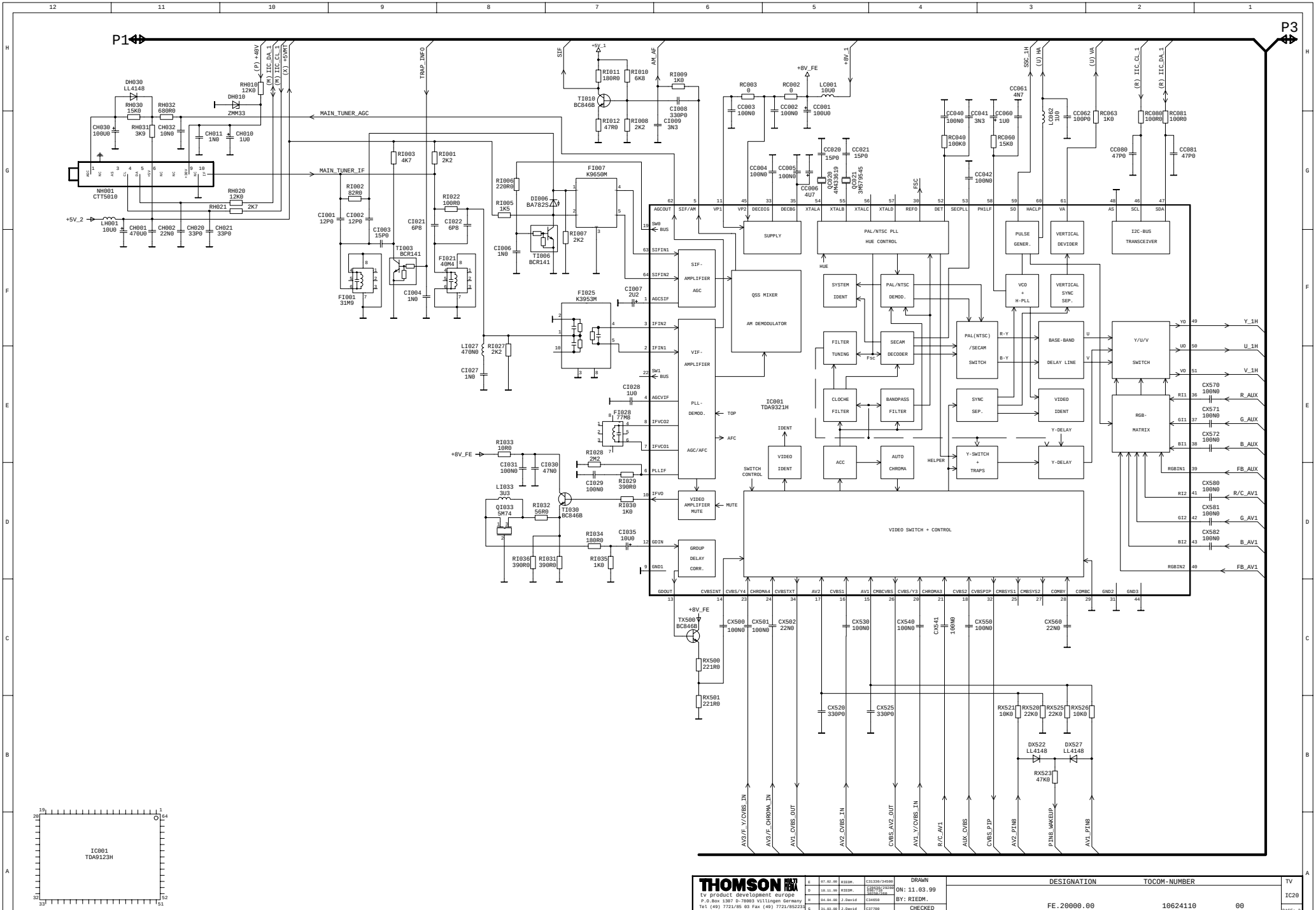

THIS DRAWING CANNOT BE COMMUNICATED TO UNAUTHORIZED PERSONS COPIED UNLESS PERMITTED IN WRITING

THOMSON MULTIMEDIA
tv product development europe
P.O.Box 1307 D-78003 Villingen Germany
Tel (49) 7721/85 03 Fax (49) 7721/852231

DEVELOPMENT DEPT: CTV_MIKA

INDEX	DATE	NAME	DESCRIPTION
E	07.02.00	RIEDM.	C31330/34500
D	18.11.99	RIEDM.	C28620/29280 C60770 C60260/260
H	04.04.00	J.David	C34650
G	31.03.00	J.David	C37700
F	27.03.00	J.David	C37100

DRAWN
ON: 11.03.99
BY: RIEDM.
CHECKED
ON:
BY:

DESIGNATION	TOCOM-NUMBER	
FE.20000.00	10624110	00

TV
IC20
PAGE: 2
OF : 3

PCAD FORMAT DIN A1

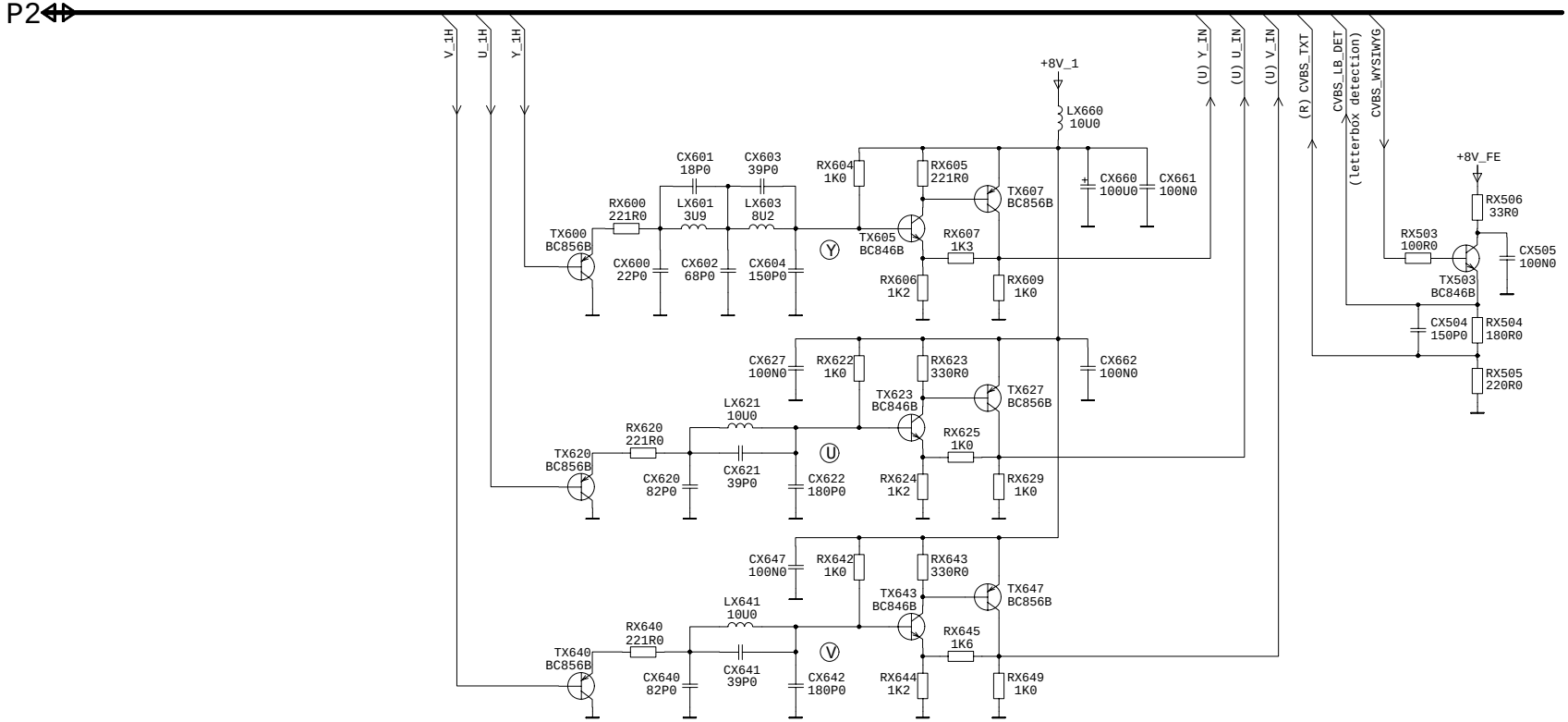

THOMSON MULTIMEDIA
tv product development europe
P.O.Box 1307 D-78003 Villingen Germany
Tel (49) 7721/85 03 Fax (49) 7721/852231

DEVELOPMENT DEPT: CTV_MIKA

INDEX	DATE	NAME	DESCRIPTION
E	07.02.00	RIEDM.	C31330/34500
D	18.11.99	RIEDM.	C28630/29280 690/710 30250/260
H	04.04.00	J.David	C34650
G	31.03.00	J.David	C37700
F	27.03.00	J.David	C37100

DRAWN
ON: 11.03.99
BY: RIEDM.
CHECKED
ON:
BY:

DESIGNATION	TOCOM-NUMBER	
FE.20000.00	10624110	00

TV
IC20
PAGE: 3
OF : 3

THIS DRAWING CANNOT BE COMMUNICATED TO UNAUTHORIZED PERSONS COPIED UNLESS PERMITTED IN WRITING

PCAD FORMAT DIN A2

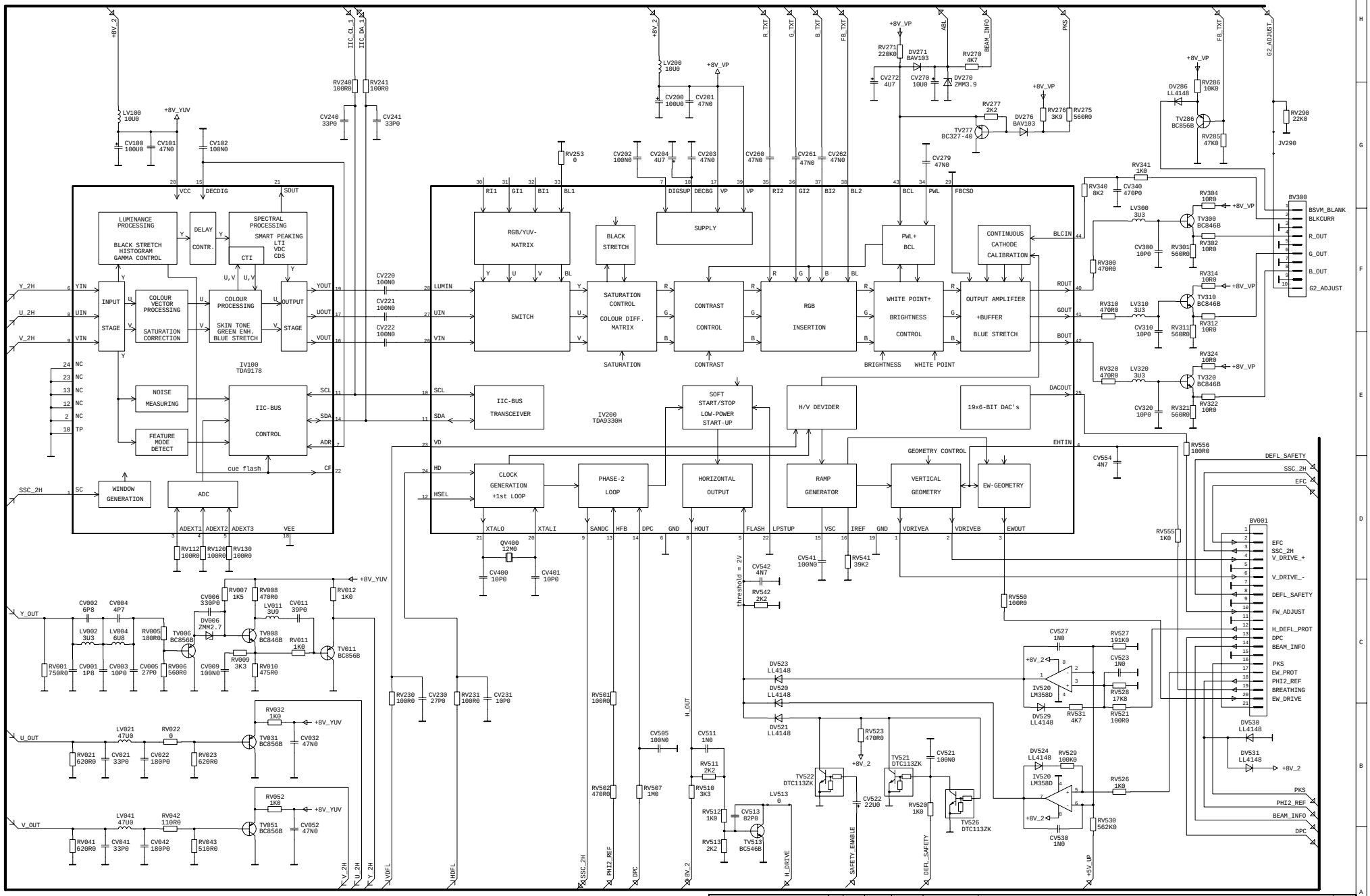
IV100 TDA9178
IV200 TDA9330H
LUMINANCE PROCESSING
BLACK STRETCH HISTOGRAM GAMMA CONTROL
DELAY
CONTR.
SPECTRAL PROCESSING
SMART PEAKING
LTI
VDC
CDS
CTI
INPUT STAGE
COLOUR VECTOR PROCESSING
SATURATION CORRECTION
COLOUR PROCESSING
SKIN TONE
GREEN ENH.
BLUE STRETCH
OUTPUT STAGE
NOISE MEASURING
FEATURE MODE DETECT
IIC-BUS CONTROL
WINDOW GENERATION
ADC
cue flash
RGB/YUV-MATRIX
BLACK STRETCH
SUPPLY
PWL+ BCL
CONTINUOUS CATHODE CALIBRATION
SWITCH
SATURATION CONTROL
COLOUR DIFF. MATRIX
CONTRAST CONTROL
RGB INSERTION
WHITE POINT+ BRIGHTNESS CONTROL
OUTPUT AMPLIFIER +BUFFER
BLUE STRETCH
SATURATION
CONTRAST
BRIGHTNESS
WHITE POINT
IIC-BUS TRANSCEIVER
SOFT START/STOP LOW-POWER START-UP
H/V DEVIDER
19x6-BIT DAC's
CLOCK GENERATION +1st LOOP
PHASE-2 LOOP
HORIZONTAL OUTPUT
RAMP GENERATOR
VERTICAL GEOMETRY
EW-GEOMETRY
GEOMETRY CONTROL
threshold = 2V
BV300
BSVM_BLANK
BLKCURR
R_OUT
G_OUT
B_OUT
G2_ADJUST
BV001
EFC
SSC_2H
V_DRIVE_+
V_DRIVE_-
DEFL_SAFETY
FW_ADJUST
H_DEFL_PROT
DPC
BEAM_INFO
PKS
EW_PROT
PHI2_REF
BREATHING
EW_DRIVE
THOMSON MULTIMEDIA
tv product development europe
P.O.Box 1307 D-78003 Villingen Germany
Tel (49) 7721/85 03 Fax (49) 7721/852231
DEVELOPMENT DEPT: CTV_LUEBCKE
DRAWN
ON: 04.11.98
BY: RIEDM.
CHECKED
ON:
BY:
DESIGNATION
TOCOM-NUMBER
VP.20000.00
10626010
TV IC20
PAGE: 1
OF : 1
THIS DRAWING CANNOT BE COMMUNICATED TO UNAUTHORIZED PERSONS COPIED UNLESS PERMITTED IN WRITING
PCAD FORMAT DIN A1

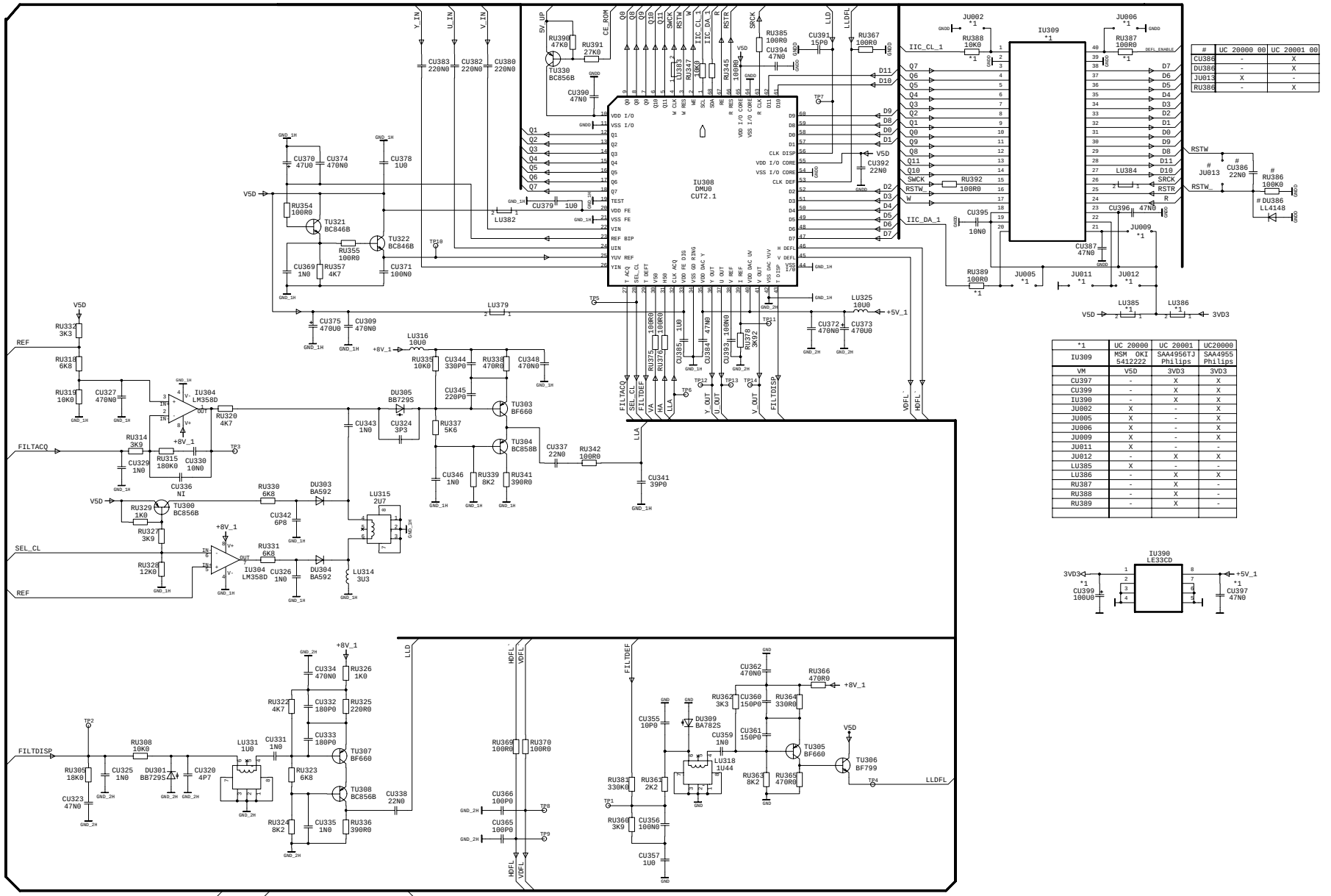

#	UC 20000 00	UC 20001 00
CU386	-	X
DU386	-	X
JU013	X	-
RU386	-	X

*1	UC 20000	UC 20001	UC20000
IU309	MSM OKI 5412222	SAA4956TJ Philips	SAA4955 Philips
VM	V5D	3VD3	3VD3
CU397	-	X	X
CU399	-	X	X
IU390	-	X	X
JU002	X	-	X
JU005	X	-	X
JU006	X	-	X
JU009	X	-	X
JU011	X	-	-
JU012	-	X	X
LU385	X	-	-
LU386	-	X	X
RU387	-	X	-
RU388	-	X	-
RU389	-	X	-

⚠ Sicherheitsbauteil
Bei Ersatz nur Originalteil verwenden
⚠ Safety Part
When repairing, use original part only
⚠ Piece de securite
N'utilisez que les pieces d'origine

THOMSON MULTIMEDIA
tv product development europe
P.O.Box 1307 D-78003 Villingen Germany
Tel (49) 7721/85 03 Fax (49) 7721/852231

DEVELOPMENT DEPT: CDH_SEEBURGER

INDEX	DATE	NAME	DESCRIPTION
E	16.11.98	RIEDM.	C29710/720 30150/80L3-C
I	05.04.00	J.David	CORRECTION
H	27.03.00	J.David	C37190
G	08.03.00	RIEDM.	C35590
F	24.02.00	RIEDM.	C30010/33010 34040/34740

DRAWN ON: 03.11.98 BY: RIEDM.
CHECKED ON: BY:

DESIGNATION	TOCOM-NUMBER	TV
UC.20000.00	10626020 00	IC20
UC.20001.00	10649920	PAGE: 1 OF : 1

THIS DRAWING CANNOT BE COMMUNICATED TO UNAUTHORIZED PERSONS COPIED UNLESS PERMITTED IN WRITING

PCAD FORMAT DIN A1

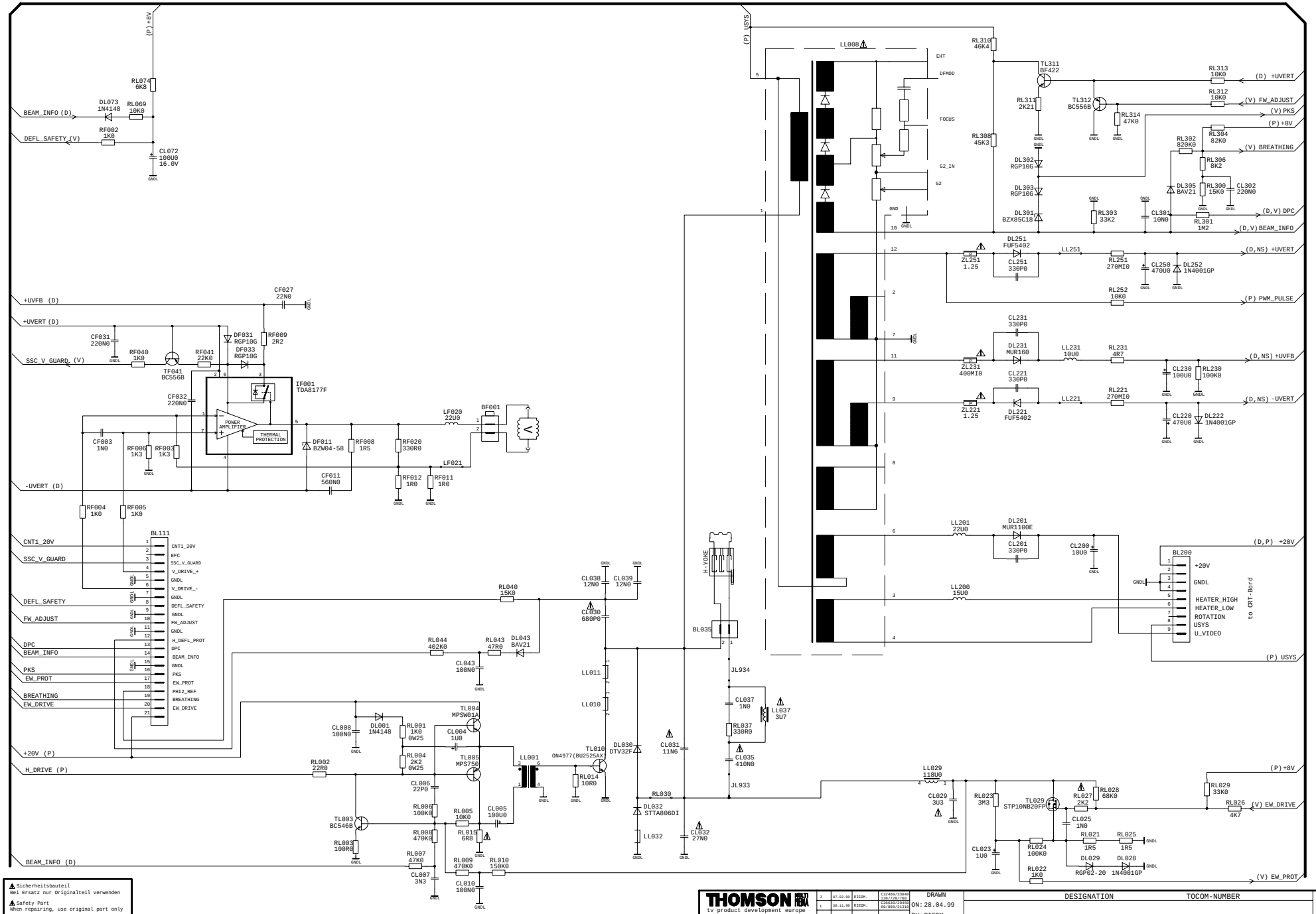
(P) +8V
RL074 6K8
BEAM_INFO (D)
DL073 1N4148
RL069 10K0
DEFL_SAFETY (V)
RF002 1K0
CL072 100U0 16.0V
GNDL
(P) USYS
LL008
EHT
DFMOD
FOCUS
G2_IN
G2
GND
RL310 46K4
TL311 BF422
RL313 10K0
(D) +UVERT
RL312 10K0
(V) FW_ADJUST
(V) PKS
(P) +8V
RL311 2K21
TL312 BC556B
RL314 47K0
RL308 45K3
RL302 820K0
RL304 82K0
(V) BREATHING
RL306 8K2
DL302 RGP10G
DL303 RGP10G
DL305 BAV21
RL300 15K0
CL302 220N0
DL301 BZX85C18
RL303 33K2
CL301 10N0
RL301 1M2
(D,V) DPC
(D,V) BEAM_INFO
DL251 FUF5402
ZL251 1.25
CL251 330P0
LL251
RL251 270MI0
CL250 470U0
DL252 1N4001GP
(D,NS) +UVERT
RL252 10K0
(P) PWM_PULSE
+UVFB (D)
CF027 22N0
+UVERT (D)
CF031 220N0
RF040 1K0
RF041 22K0
DF031 RGP10G
DF033 RGP10G
RF009 2R2
SSC_V_GUARD (V)
TF041 BC556B
IF001 TDA8177F
POWER AMPLIFIER
THERMAL PROTECTION
CF032 220N0
CL231 330P0
DL231 MUR160
ZL231 400MI0
LL231 10U0
RL231 4R7
(D,NS) +UVFB
CL230 100U0
RL230 100K0
CL221 330P0
DL221 FUF5402
ZL221 1.25
LL221
RL221 270MI0
(D,NS) -UVERT
CL220 470U0
DL222 1N4001GP
LF020 22U0
BF001
CF003 1N0
RF006 1K3
RF003 1K3
DF011 BZW04-58
RF008 1R5
RF020 330R0
LF021
CF011 560N0
RF012 1R0
RF011 1R0
-UVERT (D)
RF004 1K0
RF005 1K0
LL201 22U0
DL201 MUR1100E
CL201 330P0
CL200 10U0
(D,P) +20V
LL200 15U0
BL200
+20V
GNDL
HEATER_HIGH
HEATER_LOW
ROTATION
USYS
U_VIDEO
to CRT-Bord
(P) USYS
BL111
CNT1_20V
SSC_V_GUARD
DEFL_SAFETY
FW_ADJUST
DPC
BEAM_INFO
PKS
EW_PROT
BREATHING
EW_DRIVE
+20V (P)
H_DRIVE (P)
BEAM_INFO (D)
EFC
V_DRIVE_+
V_DRIVE_-
H_DEFL_PROT
PH12_REF
H-YOKE
BL035
RL040 15K0
CL038 12N0
CL039 12N0
CL030 680P0
RL044 402K0
RL043 47R0
DL043 BAV21
CL043 100N0
LL011
LL010
JL934
CL037 1N0
LL037 3U7
RL037 330R0
CL035 410N0
JL933
CL008 100N0
DL001 1N4148
RL001 1K0 0W25
CL004 1U0
TL004 MPSW01A
RL004 2K2 0W25
TL005 MPS750
RL002 22R0
LL001
TL010 ON4977(BU2525AX)
RL014 10R0
DL030 DTV32F
CL031 11N6
RL030
DL032 STTA806DI
LL032
CL032 27N0
CL006 22P0
RL006 100K0
RL005 10K0
CL005 100U0
RL008 470K0
RL015 6R8
TL003 BC546B
RL003 100R0
RL007 47K0
RL009 470K0
RL010 150K0
CL007 3N3
CL010 100N0
LL029 11RU0
CL029 3U3
RL023 3M3
TL029 STP10NB20FP
RL027 2K2
RL028 68K0
RL029 33K0
RL026 4K7
(V) EW_DRIVE
CL025 1N0
RL021 1R5
RL025 1R5
RL024 100K0
CL023 1U0
DL029 RGP02-20
DL028 1N4001GP
RL022 1K0
(V) EW_PROT
Sicherheitsbauteil
Bei Ersatz nur Originalteil verwenden
Safety Part
When repairing, use original part only
Piece de securite
N'utilisez que les pieces d'origine
THOMSON MULTIMEDIA
tv product development europe
P.O.Box 1307 D-78003 Villingen Germany
Tel (49) 7721/85 83 Fax (49) 7721/852231
DEVELOPMENT DEPT: CLT_LAEUFER
J 07.02.00 RIEDM. C32460/23040 128/728/768
I 30.11.99 RIEDM. C28630/29450 68/890/31310
H 18.10.99 RIEDM. C29149
G 22.09.99 RIEDM. CORRECTION
K 30.03.00 J.David C35750/35240 C35365/566 C35365/566
INDEX DATE NAME DESCRIPTION
DRAWN ON: 28.04.99
BY: RIEDM.
CHECKED ON:
BY:
DESIGNATION TOCOM-NUMBER
DP.20100.34 10626050 00
TV IC20
PAGE: 1
OF : 1
THIS DRAWING CANNOT BE COMMUNICATED TO UNAUTHORIZED PERSONS COPIED UNLESS PERMITTED IN WRITING
PCAD FORMAT DIN A1

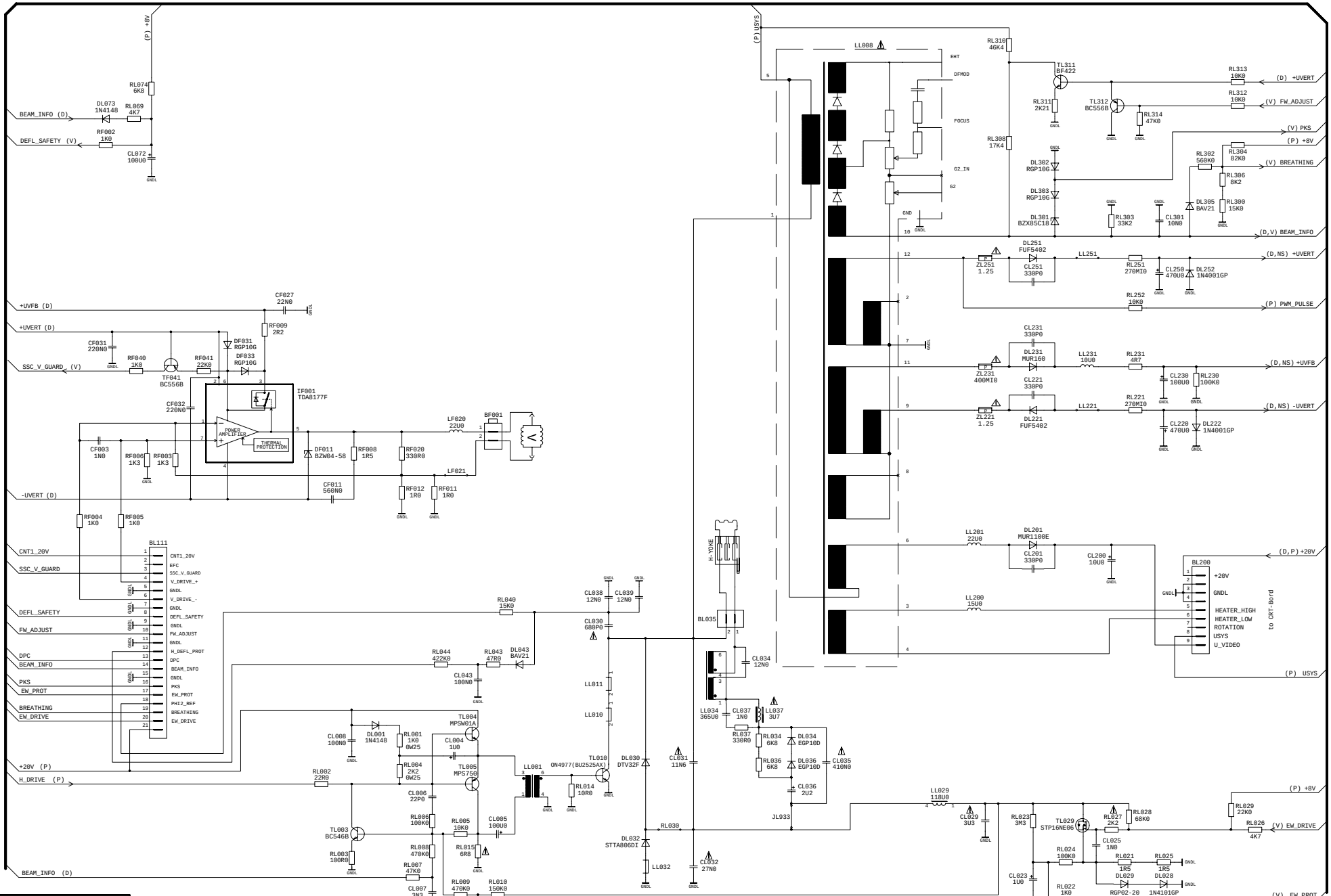

⚠ Sicherheitsbauteil
Bei Ersatz nur Originalteil verwenden

⚠ Safety Part
When repairing, use original part only

⚠ Piece de securite
N'utilisez que les pieces d'origine

THOMSON MULTIMEDIA
tv product development europe
P.O.Box 1307 D-78003 Villingen Germany
Tel (49) 7721/85 03 Fax (49) 7721/852231

DEVELOPMENT DEPT: CLT_LAEUFER

INDEX	DATE	NAME	DESCRIPTION
J	22.09.99	RIEDM.	CORRECTION
N	30.03.99	J.David	CD5490/D5700 CD5510/D5710
M	07.02.99	RIEDM.	CD5460/D5470 CD5470/D5480
L	30.11.98	RIEDM.	CD5460/D5470 CD5480/D5490 CD5490/D5510
K	16.10.98	RIEDM.	CD5140

DRAWN ON: 22.01.99 BY: RIEDM.
CHECKED ON: BY:

DESIGNATION	TOCOM-NUMBER	
DP.20101.37	10626060	00

TV IC20 PAGE: 1 OF : 1

THIS DRAWING CANNOT BE COMMUNICATED TO UNAUTHORIZED PERSONS COPIED UNLESS PERMITTED IN WRITING

PCAD FORMAT DIN A1

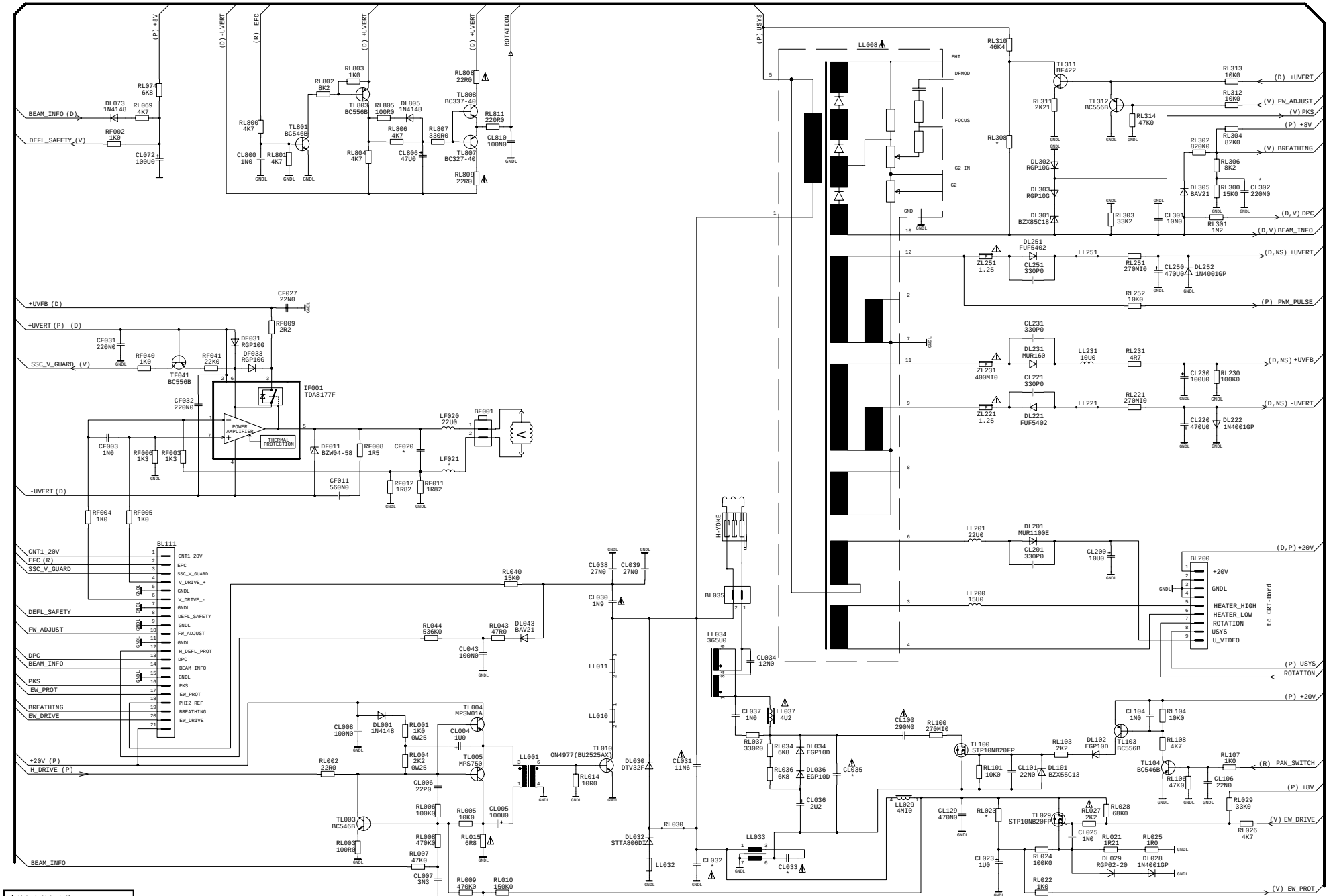

*	CF020	CL032	CL033	CL035	CL302	LF021	LL008	RL023	RL308
DP 20110 37	-	33N0	680N0	560N0	X	JUMP	10649030	3M3	17K4
DP 20112 37	100N0	27N0	510N0	510N0	-	22U0	10675710	3M9	15K0

⚠ Sicherheitsbauteil
Bei Ersatz nur Originalteil verwenden

⚠ Safety Part
When repairing, use original part only

⚠ Piece de securite
N'utilisez que les pieces d'origine

THOMSON MULTIMEDIA
tv product development europe
P.O.Box 1307 D-78003 Villingen Germany
Tel (49) 7721/85 03 Fax (49) 7721/852231

DEVELOPMENT DEPT: CPS_LAEUFER LOESLE

INDEX	DATE	NAME	DESCRIPTION
J	07.02.00	RIEDM.	
I	30.11.99	RIEDM.	
M	02.05.00	RIEDM.	
L	14.04.00	RIEDM.	CJB1220
K	31.03.00	J.David	

DRAWN ON: 28.04.99 BY: RIEDM.
CHECKED ON: BY:

DESIGNATION	TOCOM-NUMBER
DP.20110.37	10626070
DP.20112.37	10675120

00

TV IC20 PAGE: 1 OF : 1

THIS DRAWING CANNOT BE COMMUNICATED TO UNAUTHORIZED PERSONS COPIED UNLESS PERMITTED IN WRITING

PCAD FORMAT DIN A1

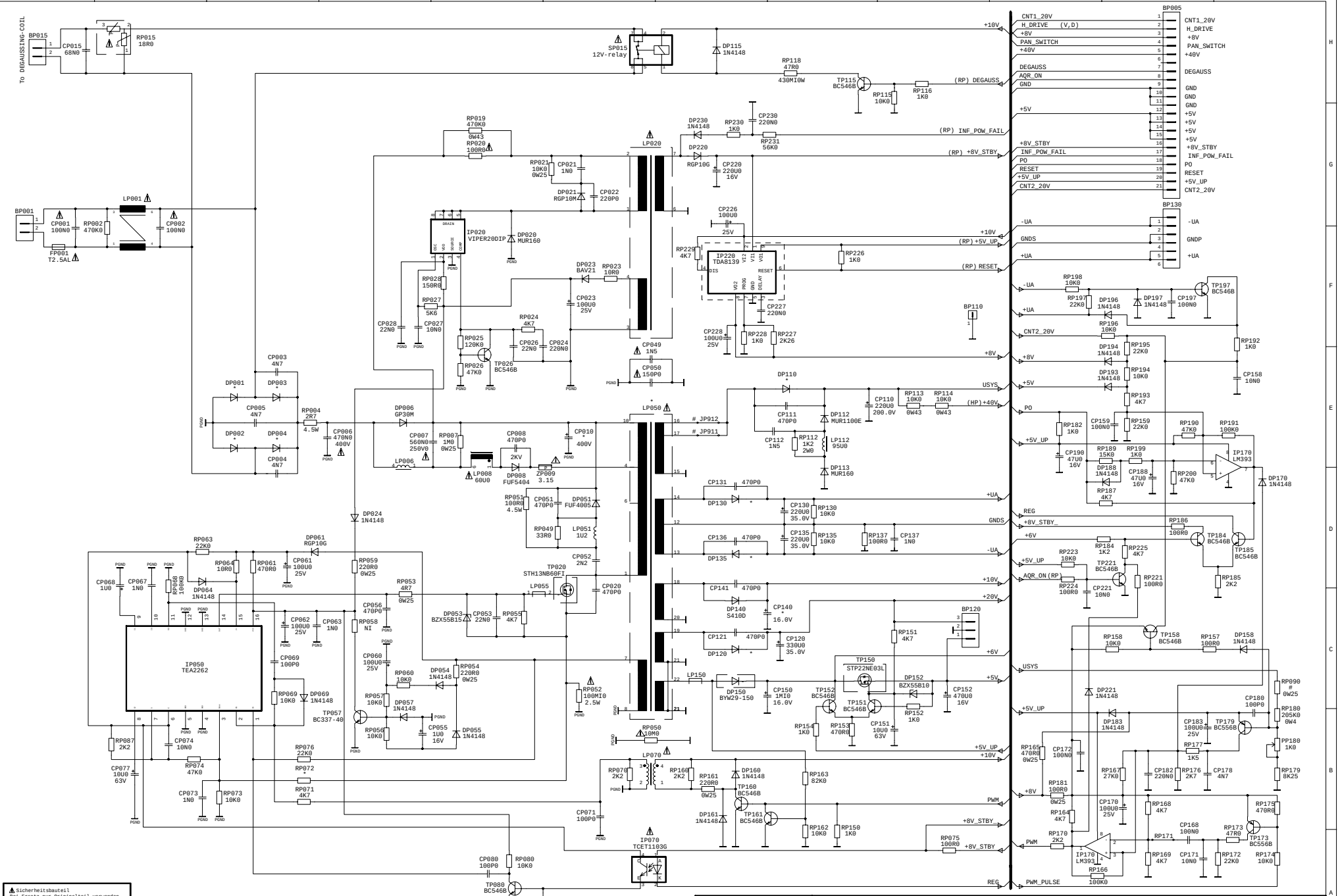

*	CP010	DP001-004	DP110	DP120	DP130+135	LP050	RP072	CP140
PP 20000 00	220U0	GP20M	RGP50M	RGP15G	RGP15G	10670390	3K3	1MI0
PP 20100 00	390U0	GP30M	BYT08PI-1000	S410D	MUR420	10643540	5K6	4MI7

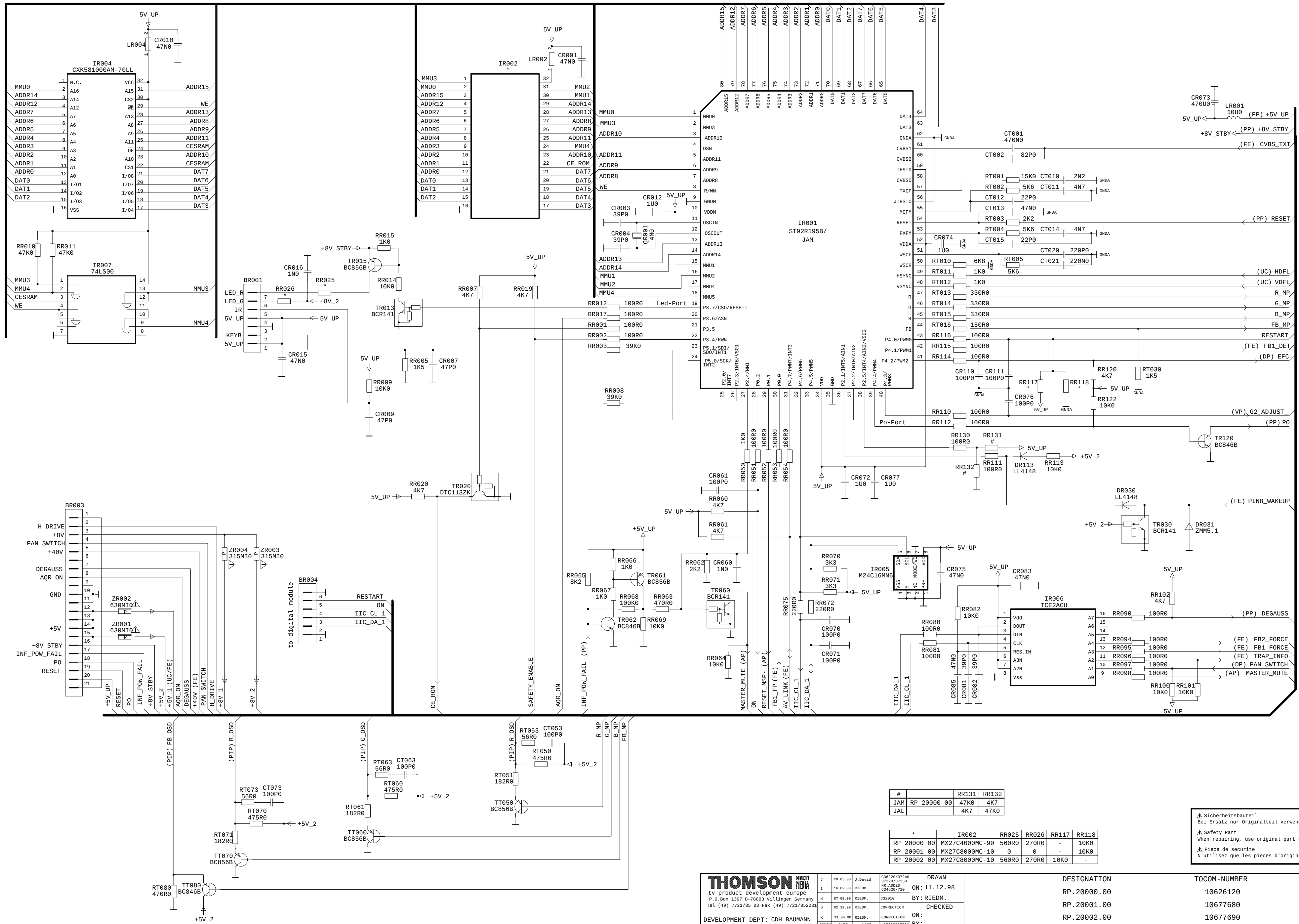

#		RR131	RR132
JAM	RP 20000 00	47K0	4K7
JAL		4K7	47K0

*	IR002	RR025	RR026	RR117	RR118
RP 20000 00	MX27C4000MC-90	560R0	270R0	-	10K0
RP 20001 00	MX27C8000MC-10	0	0	-	10K0
RP 20002 00	MX27C8000MC-10	560R0	270R0	10K0	-

⚠ Sicherheitsbauteil
Bei Ersatz nur Originalteil verwenden

⚠ Safety Part
When repairing, use original part only

⚠ Piece de securite
N'utilisez que les pieces d'origine

THOMSON MULTIMEDIA
tv product development europe
P.O.Box 1307 D-78003 Villingen Germany
Tel (49) 7721/85 03 Fax (49) 7721/852231

DEVELOPMENT DEPT: CDH_BAUMANN

DRAWN ON: 11.12.98 BY: RIEDM.
CHECKED ON: BY:

DESIGNATION	TOCOM-NUMBER
RP.20000.00	10626120
RP.20001.00	10677680
RP.20002.00	10677690

TV IC20 PAGE: 1 OF : 1

PCAD FORMAT DIN A1

THIS DRAWING CANNOT BE COMMUNICATED TO UNAUTHORIZED PERSONS COPIED UNLESS PERMITTED IN WRITING

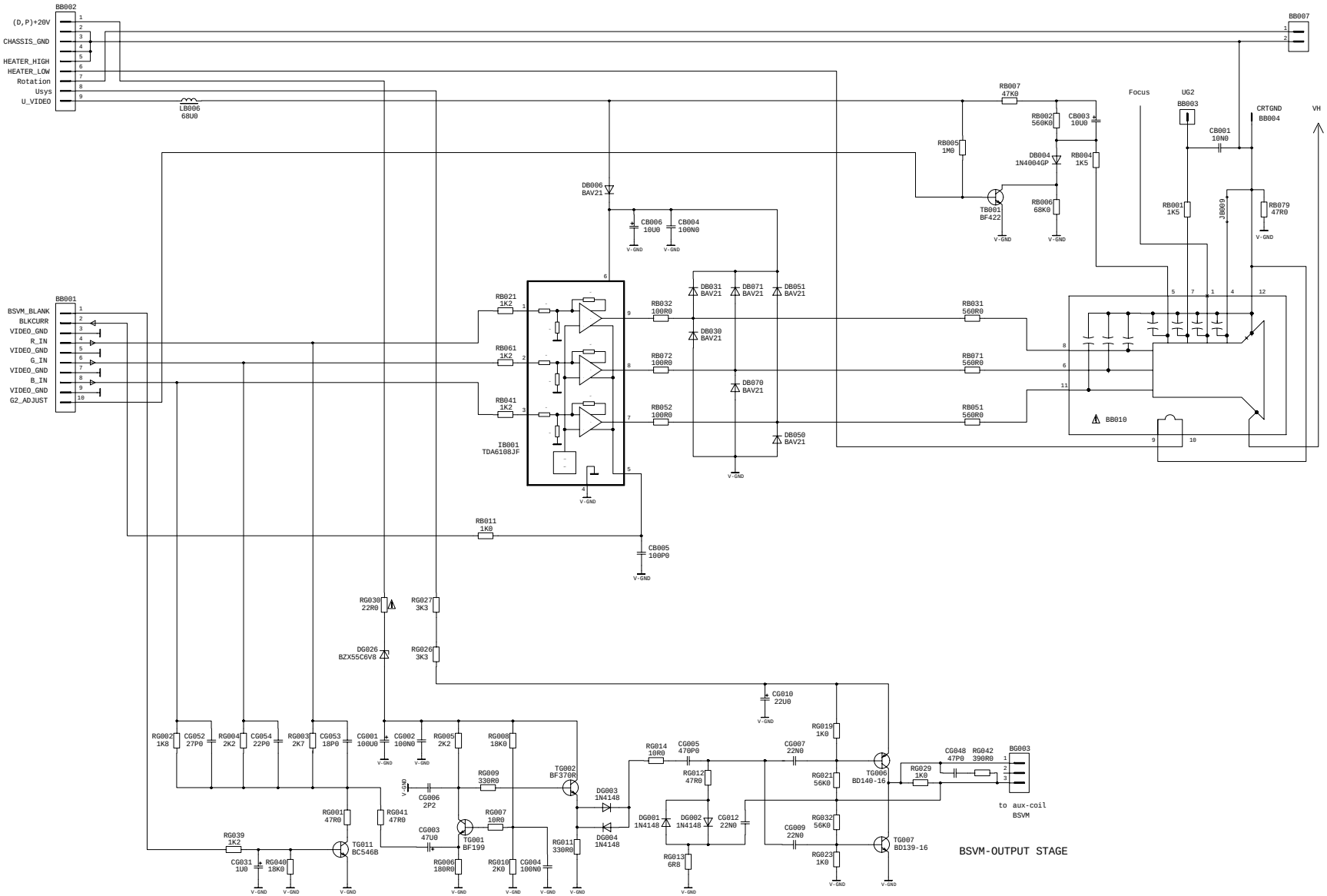

⚠ Sicherheitsbauteil
Bei Ersatz nur Originalteil verwenden

⚠ Safety Part
When repairing, use original part only

⚠ Piece de securite
N'utilisez que les pieces d'origine

THIS DRAWING CANNOT BE COMMUNICATED TO UNAUTHORIZED PERSONS COPIED UNLESS PERMITTED IN WRITING

THOMSON MULTIMEDIA
tv product development europe
P.O.Box 1307 D-78003 Villingen Germany
Tel (49) 7721/85 03 Fax (49) 7721/852231

DEVELOPMENT DEPT: CTV_FEY

INDEX	DATE	NAME	DESCRIPTION
E	17.08.98	RIEDM.	CORRECTION
I	24.03.98	J.David	C36468
H	09.02.98	RIEDM.	C33180
G	02.12.96	RIEDM.	CORRECTION
F	10.11.95	RIEDM.	C28630/10200

DRAWN ON: 23.12.98 BY: RIEDM.
CHECKED ON: BY:

DESIGNATION	TOCOM-NUMBER	
CRT.BS20100.00	10626280	TV ICC20

PAGE: 1 OF : 1

PCAD FORMAT DIN A1

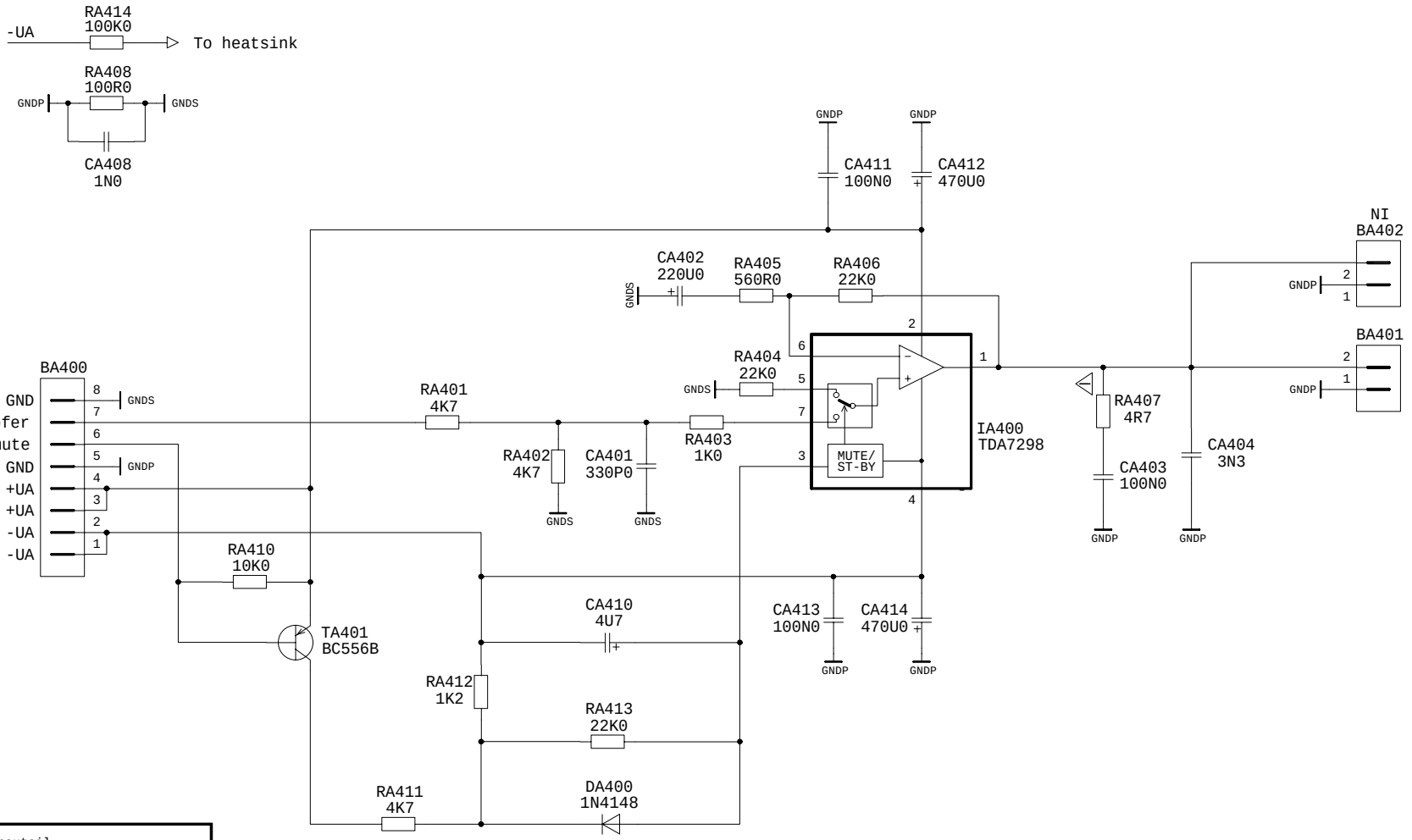

⚠ Sicherheitsbauteil
Bei Ersatz nur Originalteil verwenden

⚠ Safety Part
When repairing, use original part only

⚠ Piece de securite
N'utilisez que les pieces d'origine

THIS DRAWING CANNOT BE COMMUNICATED TO UNAUTHORIZED PERSONS COPIED UNLESS PERMITTED IN WRITING

THOMSON MULTI MEDIA
tv product development europe
P.O.Box 1307 D-78003 Villingen Germany
Tel (49) 7721/85 03 Fax (49) 7721/852231

DEVELOPMENT DEPT: CTA_PEDUZZI

INDEX	DATE	NAME	DESCRIPTION
E	16.03.00	J.David	CORRECTION
D	30.11.99	RIEDM.	CORRECTION
C	15.11.99	RIEDM.	C28630/29920
B	11.06.99	LM	CORRECTION
A	06.05.99	RIEDM.	CORRECTION

DRAWN
ON: 26.04.99
BY: RIEDM.
CHECKED
ON:
BY:

DESIGNATION	TOCOM-NUMBER	TV
PA/SW.20000.00	10626290	IC20
		PAGE: 1
		OF : 1

PCAD FORMAT DIN A3

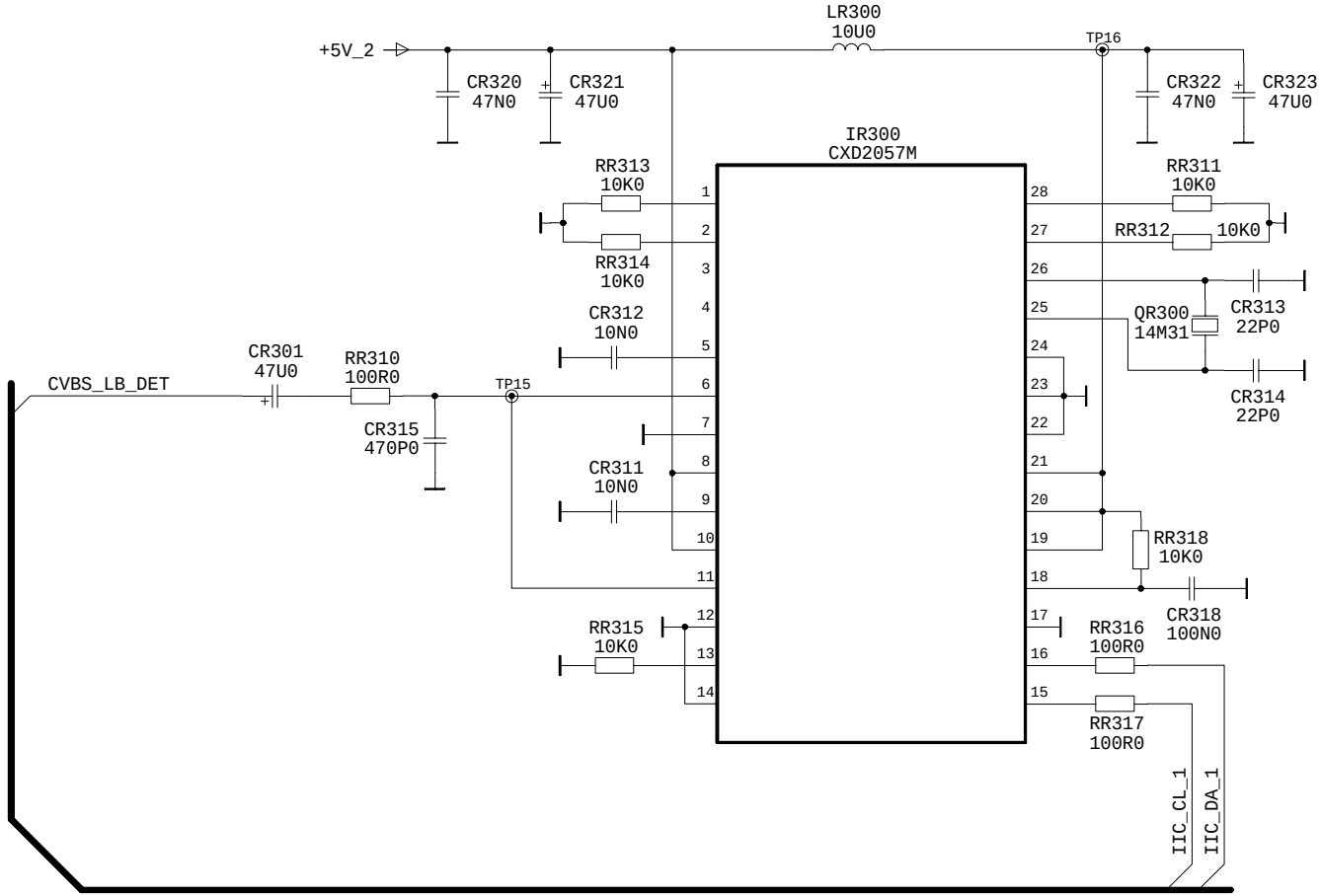

THIS DRAWING CANNOT BE COMMUNICATED TO UNAUTHORIZED PERSONS COPIED UNLESS PERMITTED IN WRITING

THOMSON MULTI MEDIA
tv product development europe
P.O.Box 1307 D-78003 Villingen Germany
Tel (49) 7721/85 03 Fax (49) 7721/852231

DEVELOPMENT DEPT: CDH_WEHRLEIN

INDEX	DATE	NAME	DESCRIPTION
...	..._..._..	.....	.....
D	16.11.99	RIEDM.	00L3-CORR. C29710
C	27.05.99	RIEDM.	CORRECTION
B	10.05.99	RIEDM.	CORRECTION
A	22.04.99	RIEDM.	00L1-CORR.

DRAWN
ON: 11.12.98
BY: RIEDM.

CHECKED
ON:
BY:

DESIGNATION	TOCOM-NUMBER	
LBD.20000.00	10628350	00L3

TV
IC20
PAGE: 1
OF : 1

PCAD FORMAT DIN A3

Breakable

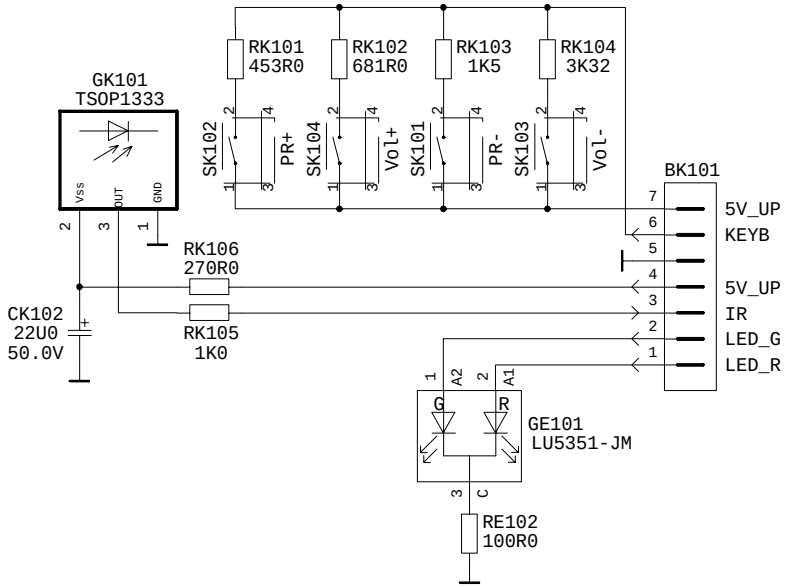

THIS DRAWING CANNOT BE COMMUNICATED TO UNAUTHORIZED PERSONS COPIED UNLESS PERMITTED IN WRITING

THOMSON MULTI MEDIA
tv product development europe
P.O.Box 1307 D-78003 Villingen Germany
Tel (49) 7721/85 03 Fax (49) 7721/852231

DEVELOPMENT DEPT: CDH_BAUMANN

INDEX	DATE	NAME	DESCRIPTION
...	..._..._..	.....	.....
...	..._..._..	.....	.....
C	03.12.99	RIEDM.	CORRECTION
B	01.09.99	RIEDM.	00L2-CORR.
A	20.04.99	H.RUF	CORRECTION

DRAWN
ON: 15.04.99
BY: RIEDM.
CHECKED
ON:
BY:

DESIGNATION	TOCOM-NUMBER	TV
KB.20000.00	10636860	IC20
		PAGE: 1
		OF : 1

PCAD FORMAT DIN A3

Breakable

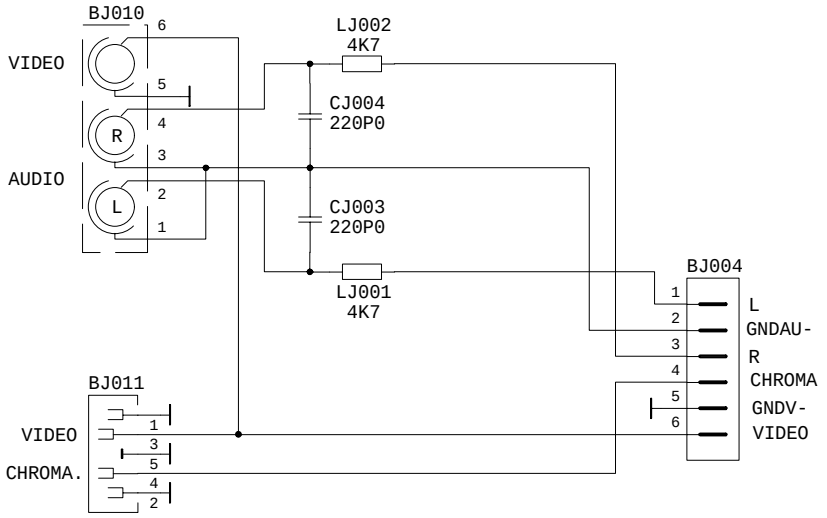

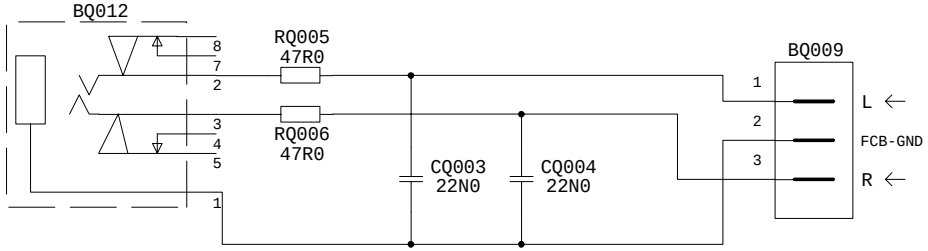

THIS DRAWING CANNOT BE COMMUNICATED TO UNAUTHORIZED PERSONS COPIED UNLESS PERMITTED IN WRITING

THOMSON MULTI MEDIA
tv product development europe
P.O.Box 1307 D-78003 Villingen Germany
Tel (49) 7721/85 03 Fax (49) 7721/852231

DEVELOPMENT DEPT: CTA-PEDUZZI
CTV-MIKA

INDEX	DATE	NAME	DESCRIPTION
...	..-..-..	.....	.....
...	..-..-..	.....	.....
C	25.02.00	RIEDM.	C31330
B	05.08.99	RIEDM.	00L2-CORR.
A	07.04.99	RIEDM.	CORRECTION

DRAWN
ON: 22.12.98
BY: J.DAVID
CHECKED
ON:
BY:

DESIGNATION	TOCOM-NUMBER
FCB.20000.00	10636870

TV
ICC20
PAGE: 1
OF : 1

PCAD FORMAT DIN A3

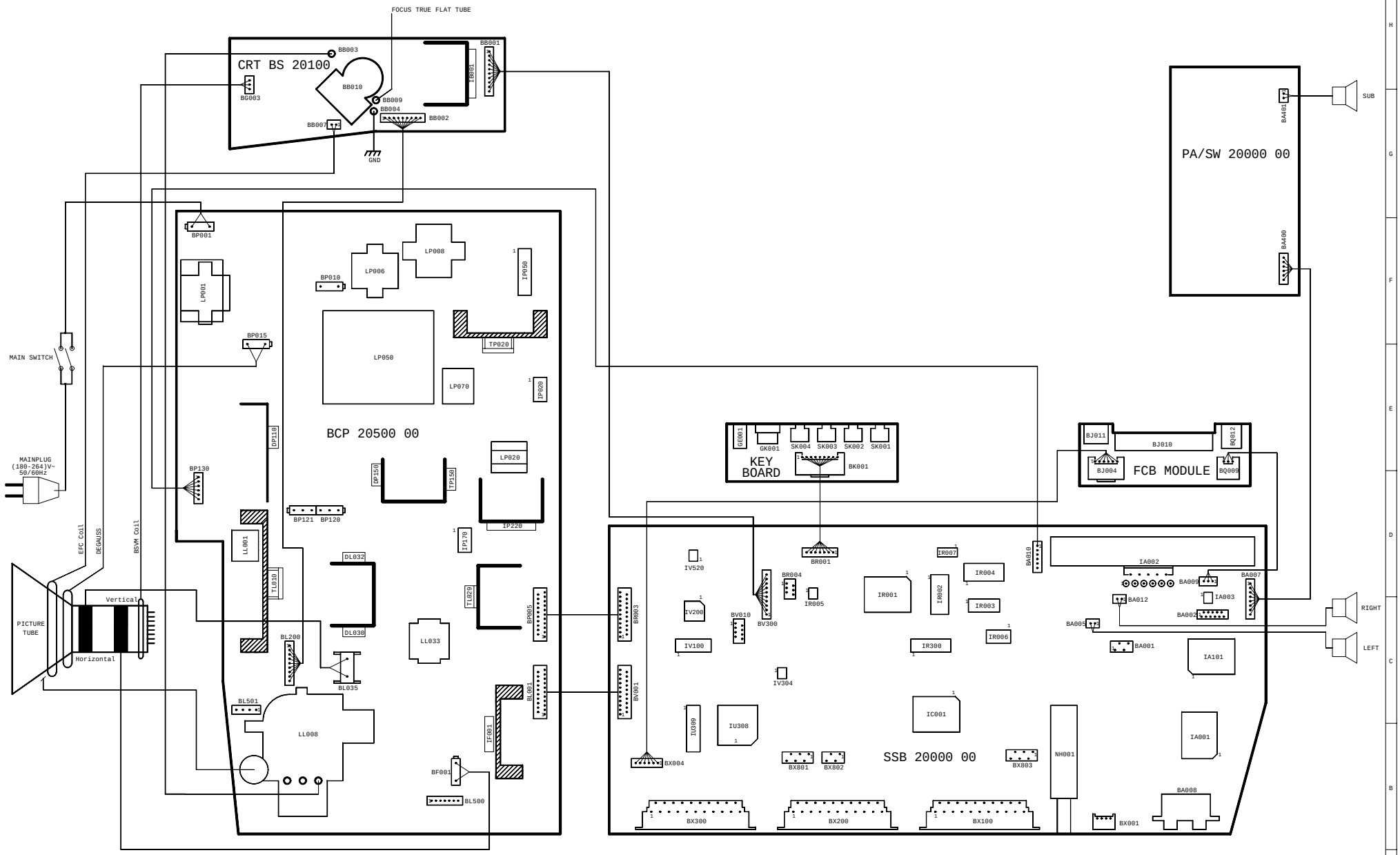

THOMSON MULTIMEDIA					DRAWN	DESIGNATION	TOCOM-NUMBER
tv product development europe					ON: 22.02.00		TV
P.O.Box 1307 D-78003 Villingen Germany					BY: RIEDM.	ICC20_TV_WIRING_DIAGRAM	10638090
Tel (49) 7721/85 03 Fax (49) 7721/852234	B	03.05.00	J.David	CORRECTION	CHECKED		IC20
DEVELOPMENT DEPT: CAT_DUFFNER	A	14-03-00	J.David		ON:		PAGE: 1
	INDEX	DATE	NAME	DESCRIPTION	BY:		OF : 2

THIS DRAWING CANNOT BE COMMUNICATED TO UNAUTHORIZED PERSONS COPIED UNLESS PERMITTED IN WRITING

PCAD FORMAT DIN A1

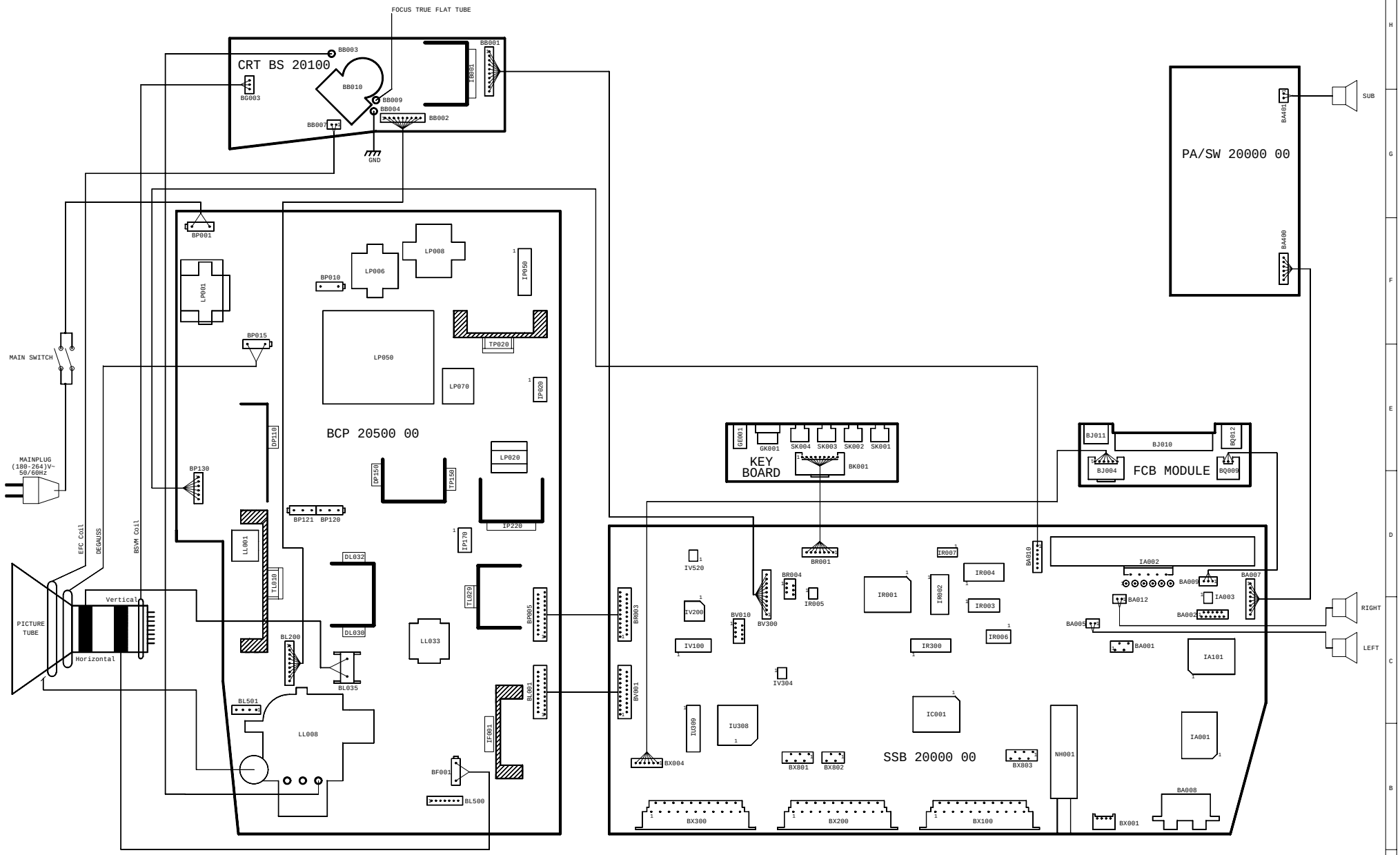

THOMSON MULTIMEDIA					DRAWN	DESIGNATION	TOCOM-NUMBER
tv product development europe					ON: 22.02.00		TV
P.O.Box 1307 D-78003 Villingen Germany					BY: RIEDM.	ICC20_TV_WIRING_DIAGRAM	10638090
Tel (49) 7721/85 03 Fax (49) 7721/852234	B	03.05.00	J.David	CORRECTION	CHECKED		IC20
DEVELOPMENT DEPT: CAT_DUFFNER	A	14-03-00	J.David		ON:		PAGE: 1
	INDEX	DATE	NAME	DESCRIPTION	BY:		OF : 2

THIS DRAWING CANNOT BE COMMUNICATED TO UNAUTHORIZED PERSONS COPIED UNLESS PERMITTED IN WRITING

PCAD FORMAT DIN A1

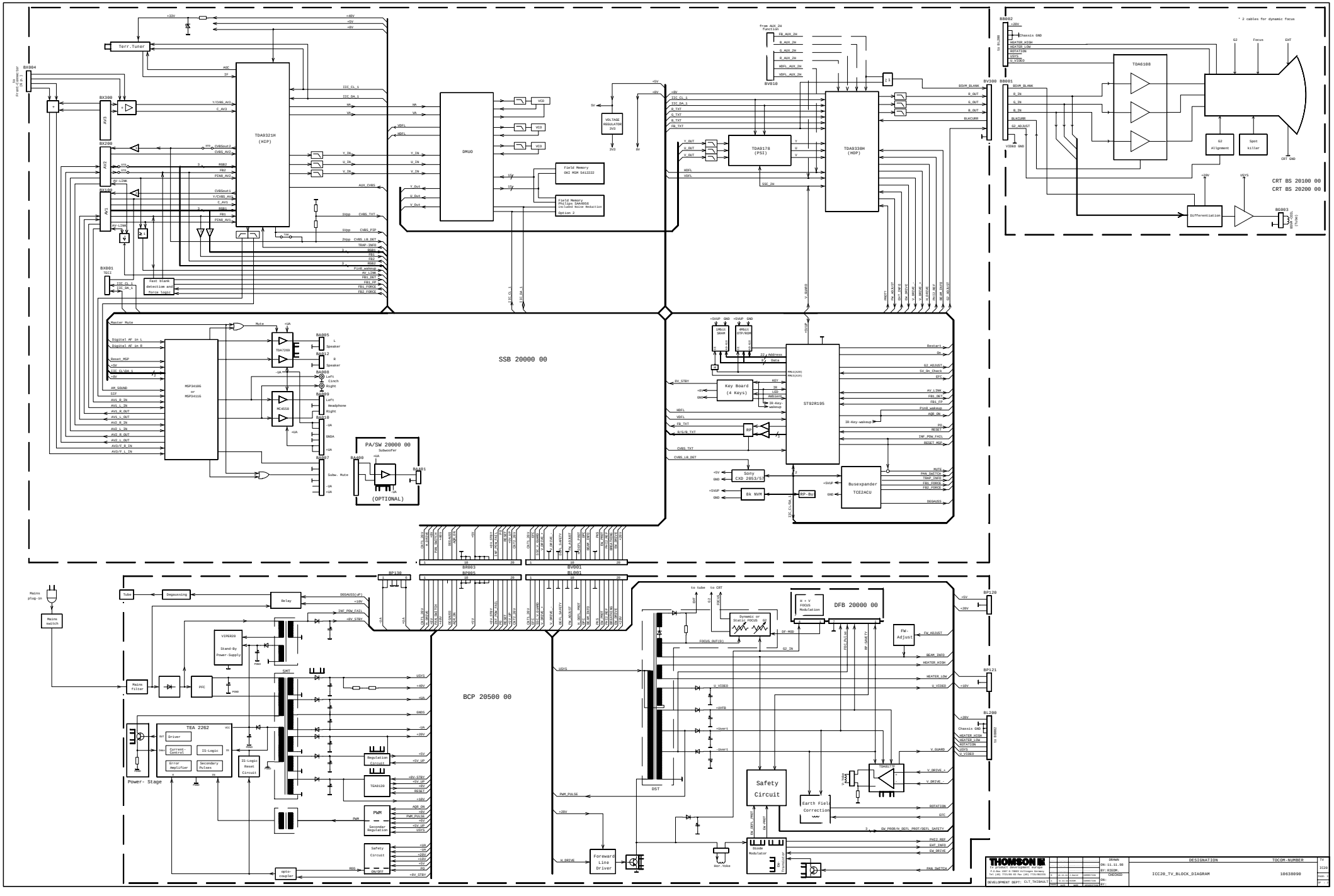

THOMSON
TV product development europe
P.O.Box 1007 D-78003 Villingen Germany
Tel (49) 7720/80 83 Fax (49) 7720/80220
DEVELOPMENT DEPT: CLT_THIBAULT

0	00.00.00	2.Ausg			
1	00.00.00	1.Ausg			
2	00.00.00	0.Ausg			
3	00.00.00	0.Ausg			

DRAWN
ON: 11.11.98
BY: RIEDM.
CHECKED
ON:
BY:

DESIGNATION	TOCOM-NUMBER
ICC20_TV_BLOCK_DIAGRAM	10638090

TV
ICC20
PAGE: 2
OF: 2

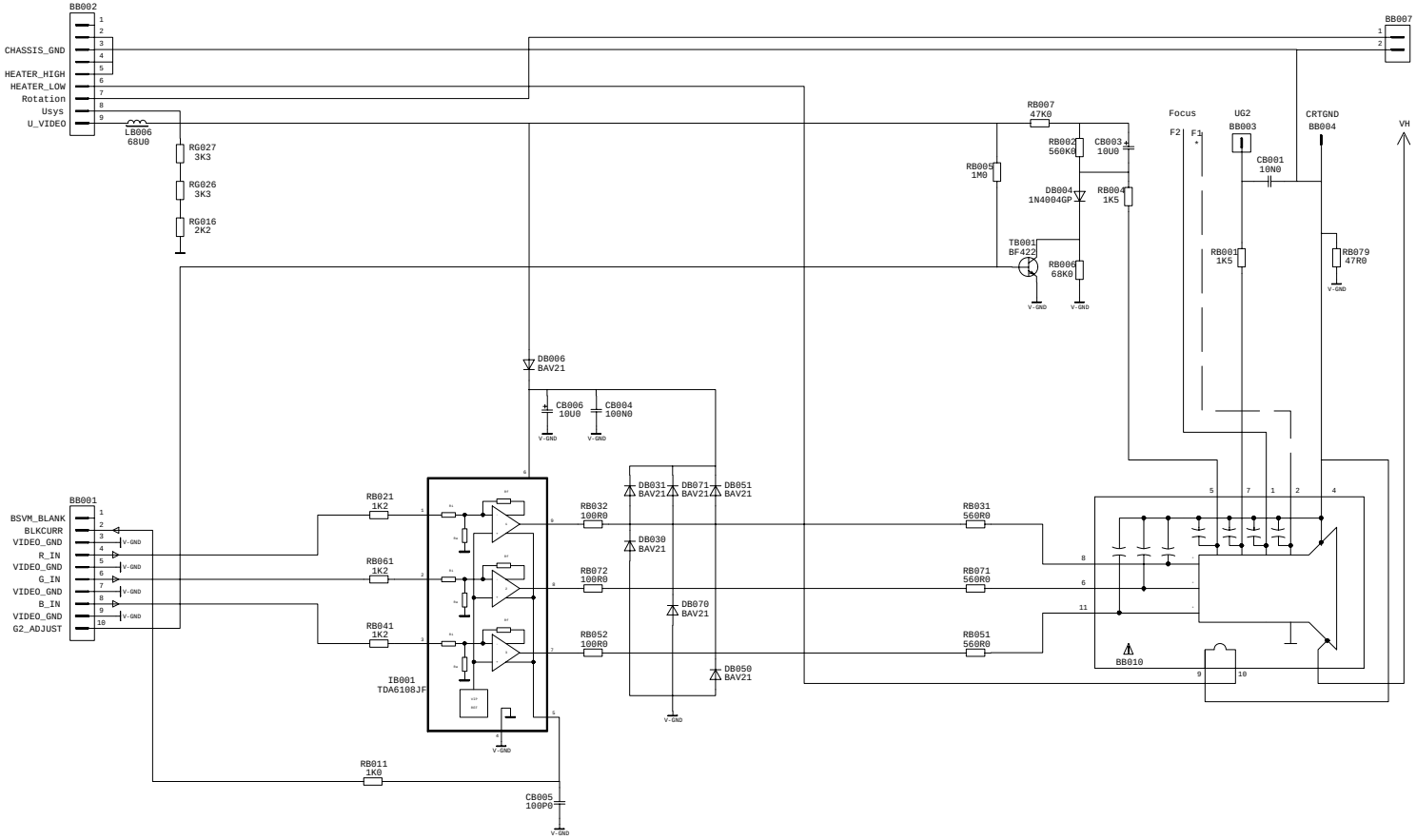

THIS DRAWING CANNOT BE COMMUNICATED TO UNAUTHORIZED PERSONS COPIED UNLESS PERMITTED IN WRITING

Sicherheitsbauteil
Bei Ersatz nur Originalteil verwenden

Safety Part
When repairing, use original part only

Piece de securite
N'utilisez que les pieces d'origine

THOMSON MULTIMEDIA
tv product development europe
P.O.Box 1307 D-78003 Villingen Germany
Tel (49) 7721/85 83 Fax (49) 7721/852231

DEVELOPMENT DEPT: CTV_FEY

INDEX	DATE	NAME	DESCRIPTION
C	18.11.98	RIEDM.	CJ0230
D	17.09.98	RIEDM.	CORRECTION
H	04.04.00	J.David	CJ4730
G	08.02.00	RIEDM.	CJ3100/680
F	02.12.98	RIEDM.	CORRECTION

DRAWN
ON: 23.12.98
BY: RIEDM.
CHECKED
ON:
BY:

DESIGNATION	TOCOM-NUMBER
CRT.20000.00	10638180

TV
ICC20
PAGE: 1
OF : 1

PCAD FORMAT DIN A1

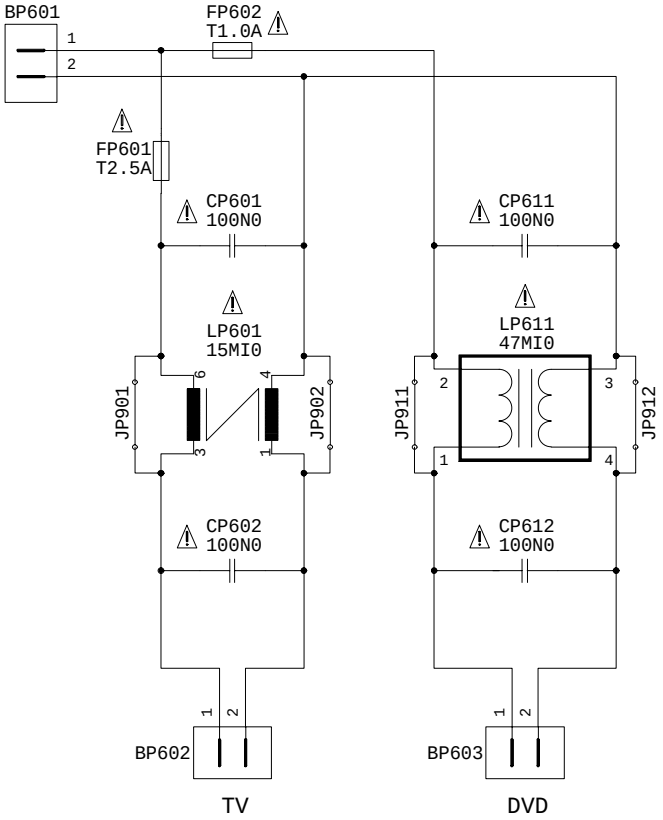

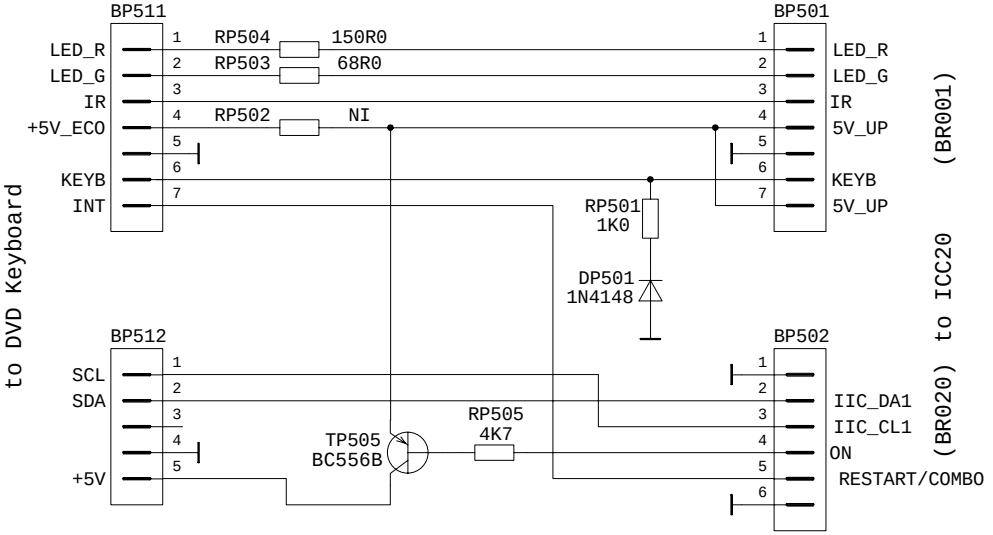

⚠ Sicherheitsbauteil
Bei Ersatz nur Originalteil verwenden

⚠ Safety Part
When repairing, use original part only

⚠ Piece de securite
N'utilisez que les pieces d'origine

THIS DRAWING CANNOT BE COMMUNICATED TO UNAUTHORIZED PERSONS COPIED UNLESS PERMITTED IN WRITING

THOMSON MULTI MEDIA
tv product development europe
P.O.Box 1307 D-78003 Villingen Germany
Tel (49) 7721/85 03 Fax (49) 7721/852231
DEVELOPMENT DEPT: CPS_THIBAULT

INDEX	DATE	NAME	DESCRIPTION
...	..-..-..	.....	.....
...	..-..-..	.....	.....
...	..-..-..	.....	.....
...	..-..-..	.....	.....
...	..-..-..	.....	.....

DRAWN
ON: 24.01.00
BY: RIEDM.
CHECKED
ON:
BY:

DESIGNATION	TOCOM-NUMBER	
PD.DVD.20000.00	10673240	TV IC20 PAGE: 1 OF : 1

PCAD FORMAT DIN A3

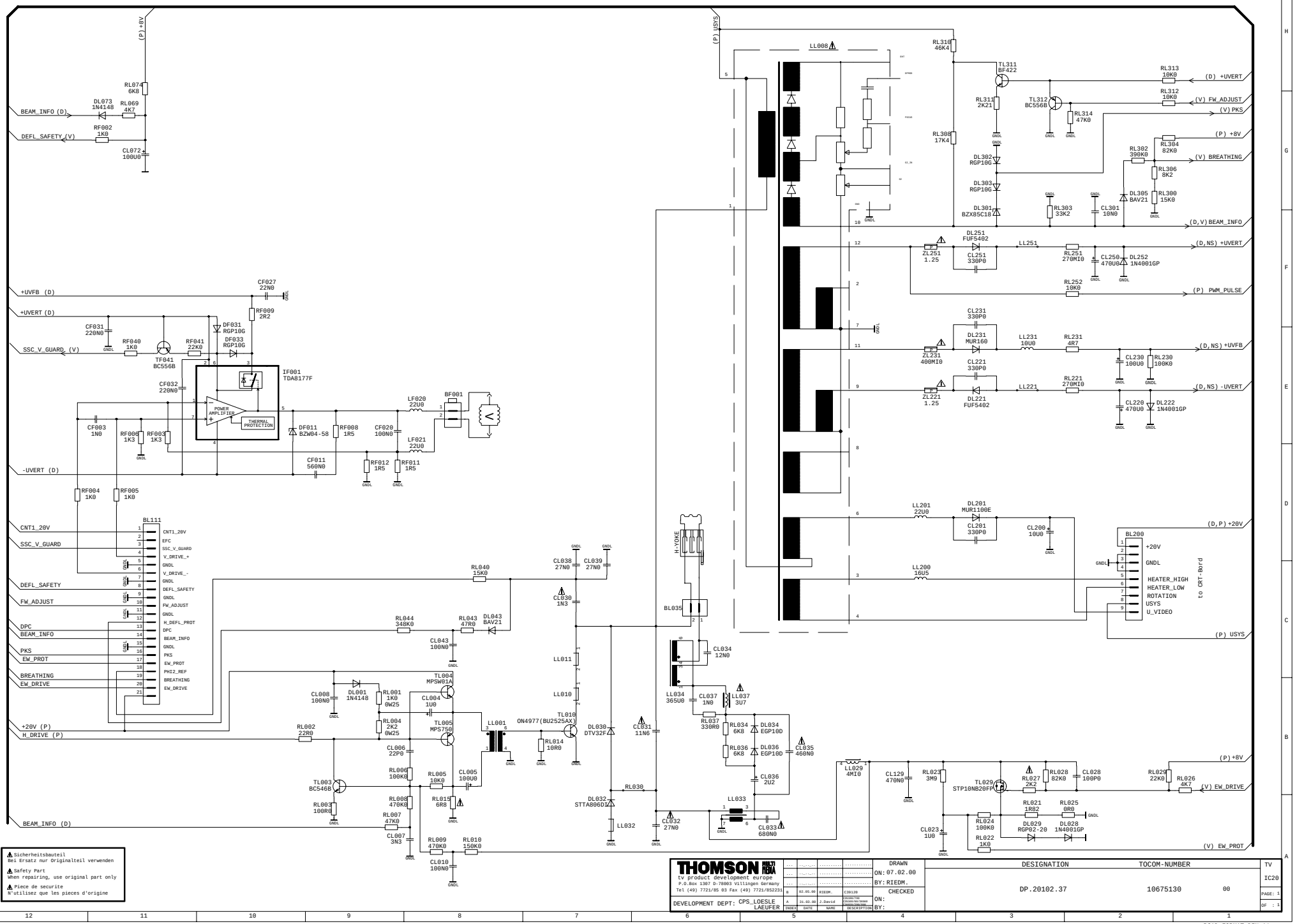
(P) +8V
RL074 6K8
BEAM_INFO (D)
DL073 1N4148
RL069 4K7
DEFL_SAFETY (V)
RF002 1K0
CL072 100U0
(P) USYS
LL008
RL310 46K4
TL311 BF422
RL313 10K0
(D) +UVERT
RL312 10K0
(V) FW_ADJUST
RL311 2K21
TL312 BC556B
RL314 47K0
(V) PKS
RL308 17K4
RL304 82K0
(P) +8V
RL302 390K0
(V) BREATHING
RL306 8K2
DL302 RGP10G
DL303 RGP10G
DL301 BZX85C18
RL303 33K2
CL301 10N0
DL305 BAV21
RL300 15K0
(D,V) BEAM_INFO
DL251 FUF5402
ZL251 1.25
CL251 330P0
LL251
RL251 270MI0
CL250 470U0
DL252 1N4001GP
(D,NS) +UVERT
RL252 10K0
(P) PWM_PULSE
+UVFB (D)
CF027 22N0
+UVERT (D)
RF009 2R2
CF031 220N0
RF040 1K0
RF041 22K0
DF031 RGP10G
DF033 RGP10G
SSC_V_GUARD (V)
TF041 BC556B
IF001 TDA8177F
CF032 220N0
POWER AMPLIFIER
THERMAL PROTECTION
CF003 1N0
RF006 1K3
RF003 1K3
LF020 22U0
BF001
DF011 BZW04-58
RF008 1R5
CF020 100N0
LF021 22U0
CF011 560N0
RF012 1R5
RF011 1R5
-UVERT (D)
CL231 330P0
DL231 MUR160
ZL231 400MI0
LL231 10U0
RL231 4R7
CL230 100U0
RL230 100K0
(D,NS) +UVFB
CL221 330P0
ZL221 1.25
DL221 FUF5402
LL221
RL221 270MI0
CL220 470U0
DL222 1N4001GP
(D,NS) -UVERT
RF004 1K0
RF005 1K0
LL201 22U0
DL201 MUR1100E
CL201 330P0
CL200 10U0
(D,P) +20V
LL200 16U5
BL200
+20V
GNDL
HEATER_HIGH
HEATER_LOW
ROTATION
USYS
U_VIDEO
to CRT-Bord
BL111
CNT1_20V
SSC_V_GUARD
DEFL_SAFETY
FW_ADJUST
DPC
BEAM_INFO
PKS
EW_PROT
BREATHING
EW_DRIVE
+20V (P)
H_DRIVE (P)
BEAM_INFO (D)
EFC
SSC_V_GUARD
V_DRIVE_+
V_DRIVE_-
H_DEFL_PROT
PHI2_REF
H-YOKE
BL035
RL040 15K0
CL038 27N0
CL039 27N0
CL030 1N3
RL044 348K0
RL043 47R0
DL043 BAV21
CL043 100N0
LL011
LL010
CL034 12N0
LL034 365U0
CL037 1N0
LL037 3U7
RL037 330R0
RL034 6K8
DL034 EGP10D
RL036 6K8
DL036 EGP10D
CL035 460N0
CL036 2U2
LL033
CL033 680N0
CL032 27N0
LL032
DL032 STTA806DI
RL030
CL031 11N6
DL030 DTV32F
TL010 ON4977(BU2525AX)
RL014 10R0
LL001
TL004 MPSW01A
TL005 MPS750
TL003 BC546B
CL008 100N0
DL001 1N4148
RL001 1K0 0W25
CL004 1U0
RL004 2K2 0W25
RL002 22R0
CL006 22P0
RL006 100K0
RL005 10K0
CL005 100U0
RL008 470K0
RL015 6R8
RL007 47K0
CL007 3N3
RL009 470K0
RL010 150K0
CL010 100N0
RL003 100R0
L029 4MI0
CL129 470N0
RL023 3M9
TL029 STP10NB20FP
RL027 2K2
RL028 82K0
CL028 100P0
RL029 22K0
RL026 4K7
(V) EW_DRIVE
RL021 1R82
RL025 0R0
DL029 RGP02-20
DL028 1N4001GP
RL024 100K0
RL022 1K0
CL023 1U0
(V) EW_PROT
Sicherheitsbauteil
Bei Ersatz nur Originalteil verwenden
Safety Part
When repairing, use original part only
Piece de securite
N'utilisez que les pieces d'origine
THOMSON MULTI MEDIA
tv product development europe
P.O.Box 1307 D-78003 Villingen Germany
Tel (49) 7721/85 03 Fax (49) 7721/852231
DEVELOPMENT DEPT: CPS_LOESLE LAEUFER
DRAWN
ON: 07.02.00
BY: RIEDM.
CHECKED
ON:
BY:
DESIGNATION
TOCOM-NUMBER
DP.20102.37
10675130
00
TV
IC20
PAGE: 1
OF : 1
THIS DRAWING CANNOT BE COMMUNICATED TO UNAUTHORIZED PERSONS COPIED UNLESS PERMITTED IN WRITING
PCAD FORMAT DIN A1

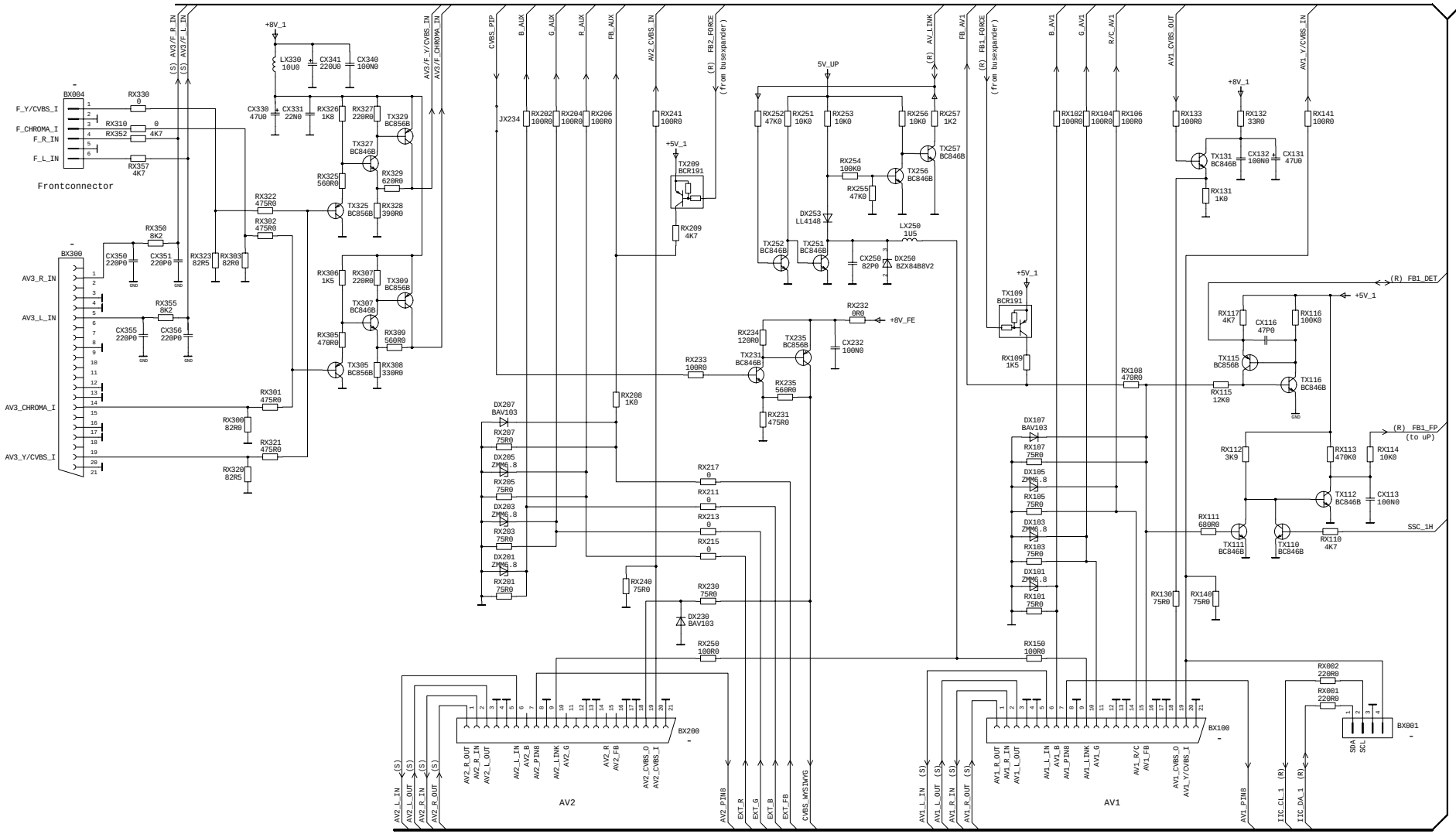

THIS DRAWING CANNOT BE COMMUNICATED TO UNAUTHORIZED PERSONS COPIED UNLESS PERMITTED IN WRITING

THOMSON multimedia tv product development europe P.O.Box 1307 D-78003 Villingen Germany Tel (49) 7721/85 03 Fax (49) 7721/852231	DRAWN ON: 07.04.00 BY: J.David CHECKED ON: BY:	DESIGNATION	TOCOM-NUMBER
DEVELOPMENT DEPT: CTV_MIKA	INDEX / DATE / NAME / DESCRIPTION	FE.20001.00	10677100 00

TV IC20 PAGE: 1 OF : 3

PCAD FORMAT DIN A1

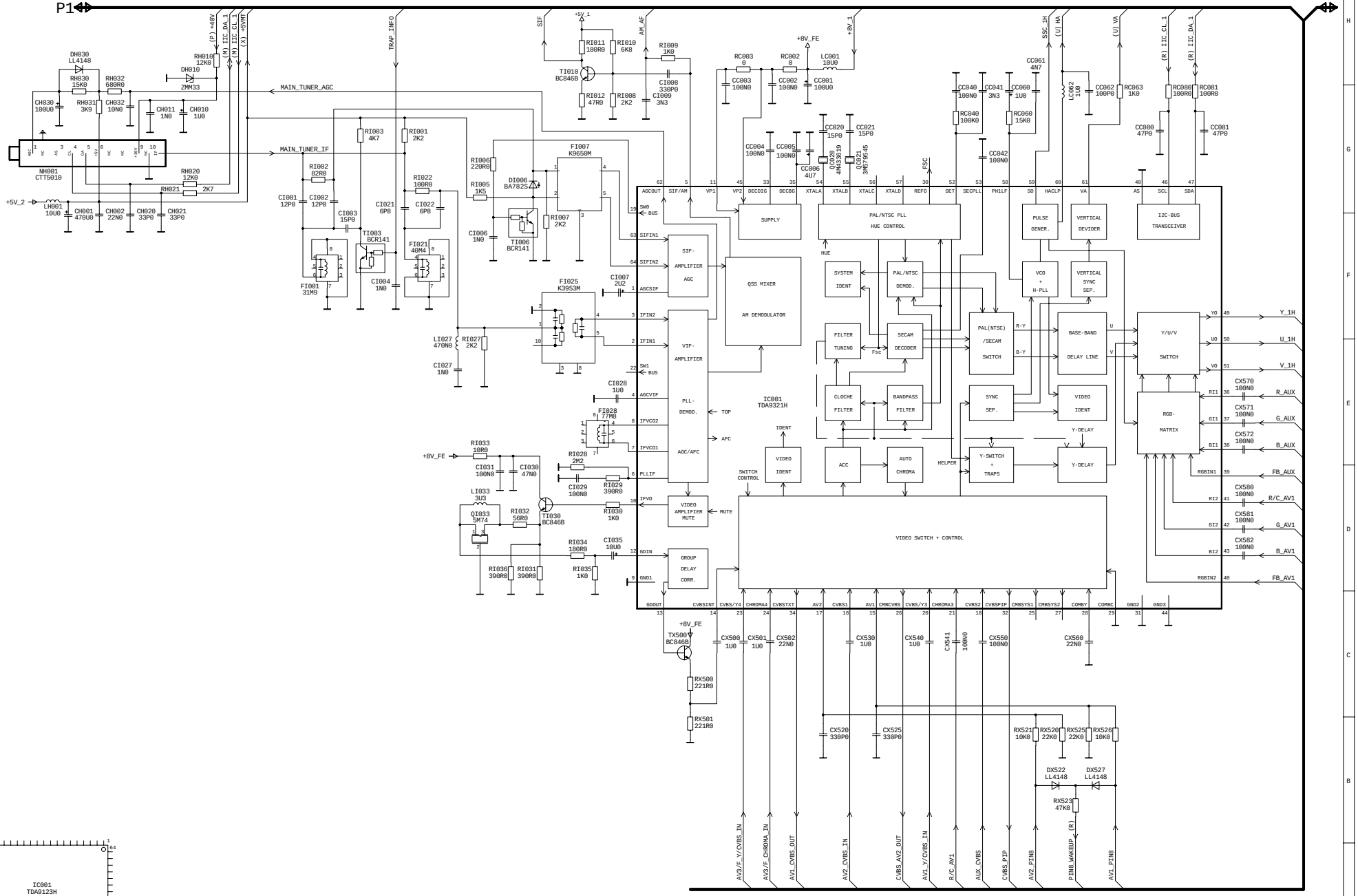

THOMSON MULTIMEDIA
tv product development europe
P.O.Box 1307 D-78003 Villingen Germany
Tel (49) 7721/85 03 Fax (49) 7721/852231

DEVELOPMENT DEPT: CTV_MIKA

INDEX	DATE	NAME	DESCRIPTION

DRAWN
ON: 07.04.00
BY: J.David
CHECKED
ON:
BY:

DESIGNATION	TOCOM-NUMBER	
FE.20001.00	10677100	00

TV IC20
PAGE: 2
OF : 3

THIS DRAWING CANNOT BE COMMUNICATED TO UNAUTHORIZED PERSONS COPIED UNLESS PERMITTED IN WRITING

PCAD FORMAT DIN A1

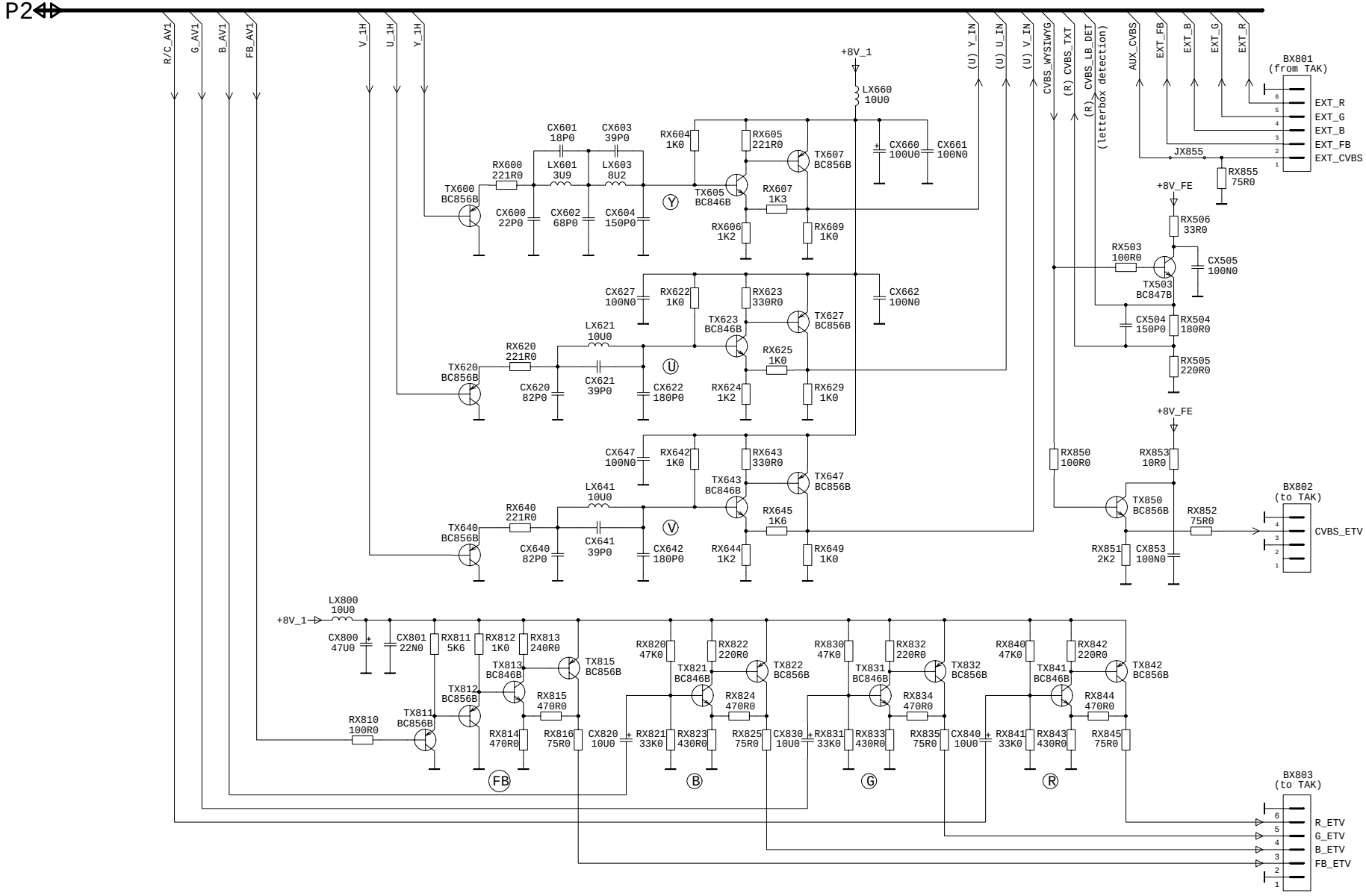

THOMSON MULTI MEDIA
tv product development europe
P.O.Box 1307 D-78003 Villingen Germany
Tel (49) 7721/85 03 Fax (49) 7721/852231

DEVELOPMENT DEPT: CTV_MIKA

INDEX	DATE	NAME	DESCRIPTION
..	..	..	..

DRAWN
ON: 07.04.00
BY: J.David
CHECKED
ON:
BY:

DESIGNATION	TOCOM-NUMBER	
FE.20001.00	10677100	00

TV
IC20
PAGE: 3
OF : 3

THIS DRAWING CANNOT BE COMMUNICATED TO UNAUTHORIZED PERSONS COPIED UNLESS PERMITTED IN WRITING

PCAD FORMAT DIN A2

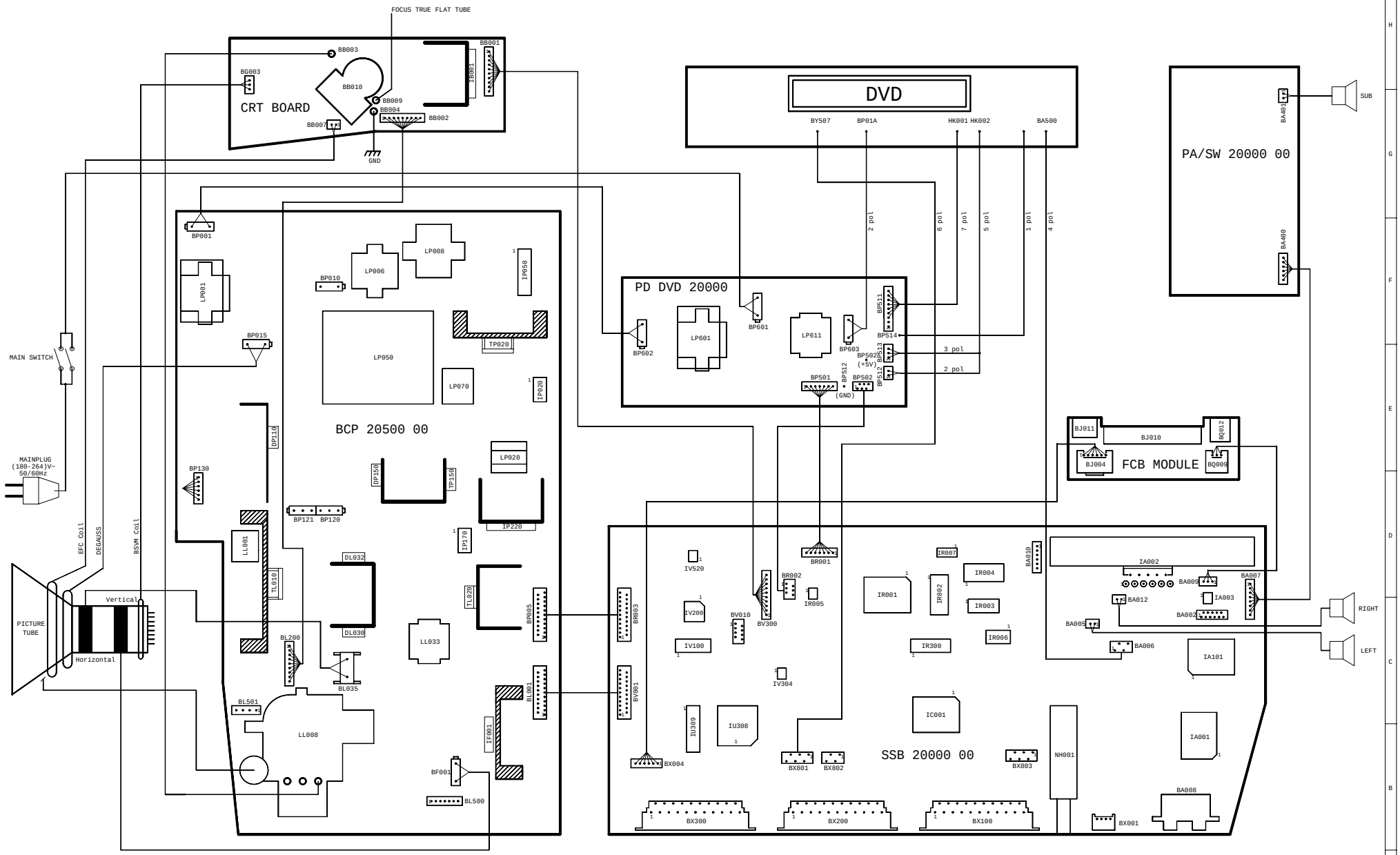

THIS DRAWING CANNOT BE COMMUNICATED TO UNAUTHORIZED PERSONS COPIED UNLESS PERMITTED IN WRITING

THOMSON multimedia
tv product development europe
P.O.Box 1307 D-78003 Villingen Germany
Tel (49) 7721/85 03 Fax (49) 7721/852231

DEVELOPMENT DEPT: CAT_DUFFNER

INDEX	DATE	NAME	DESCRIPTION
A	03.05.00	J.David	CORRECTION

DRAWN ON: 14-03-00 BY: J.David
CHECKED ON: BY:

DESIGNATION	TOCOM-NUMBER	TV
ICC20_DVD_WIRING_DIAGRAM	10684580	IC20

PAGE: 1 OF : 2

PCAD FORMAT DIN A1

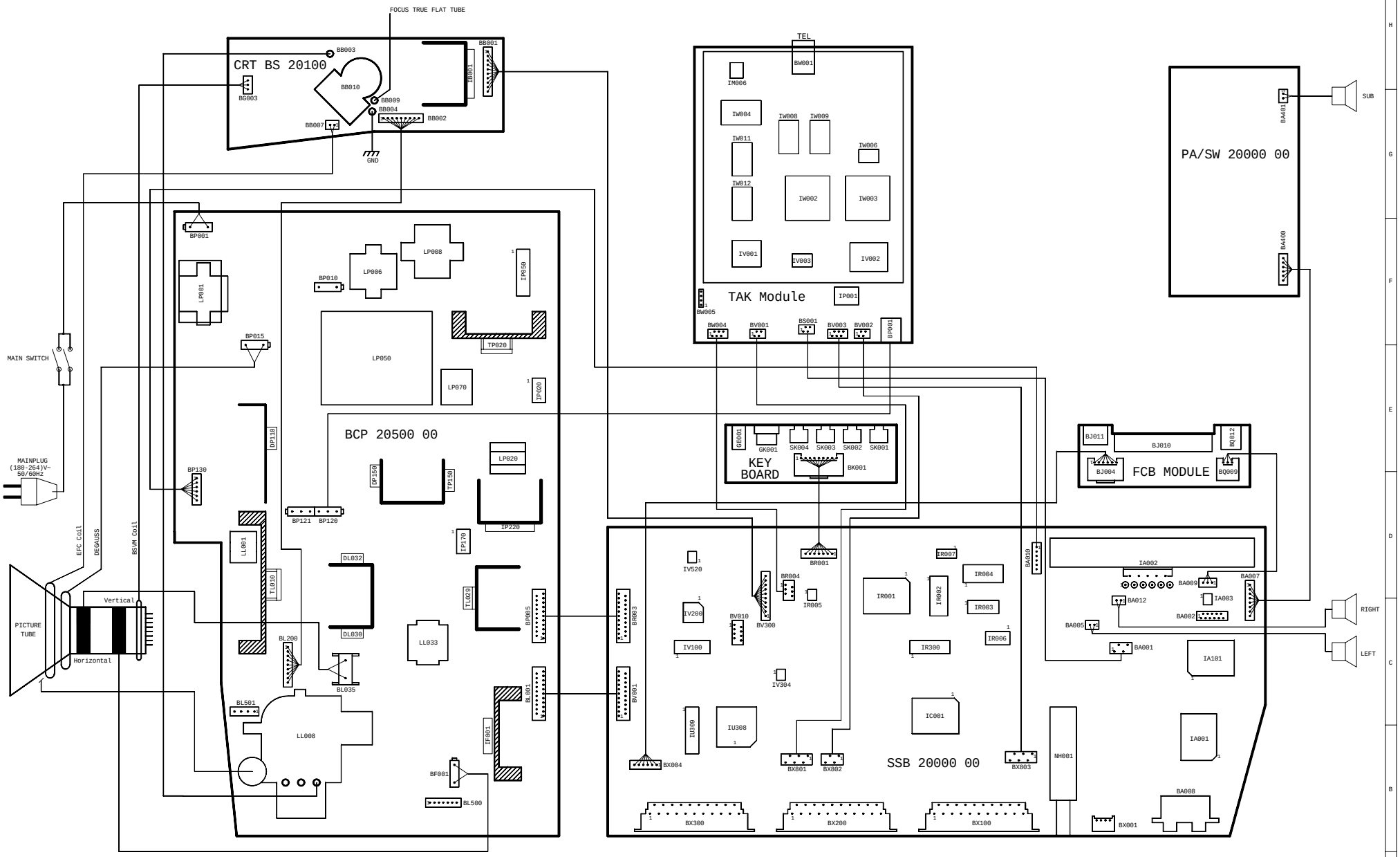

THIS DRAWING CANNOT BE COMMUNICATED TO UNAUTHORIZED PERSONS COPIED UNLESS PERMITTED IN WRITING

THOMSON MULTIMEDIA					DRAWN	DESIGNATION	TOCOM-NUMBER
tv product development europe P.O.Box 1307 D-78003 Villingen Germany Tel (49) 7721/85 03 Fax (49) 7721/852231					ON: 22.02.00 BY: RIEDM.	ICC20_TAK_WIRING_DIAGRAM	10684890
	B	03.05.00	J.David	CORRECTION	CHECKED		
DEVELOPMENT DEPT: CAT_DUFFNER	A	14-02-00	J.David		ON: BY:		
	INDEX	DATE	NAME	DESCRIPTION			

TV IC20 PAGE: 1 OF : 2

PCAD FORMAT DIN A1

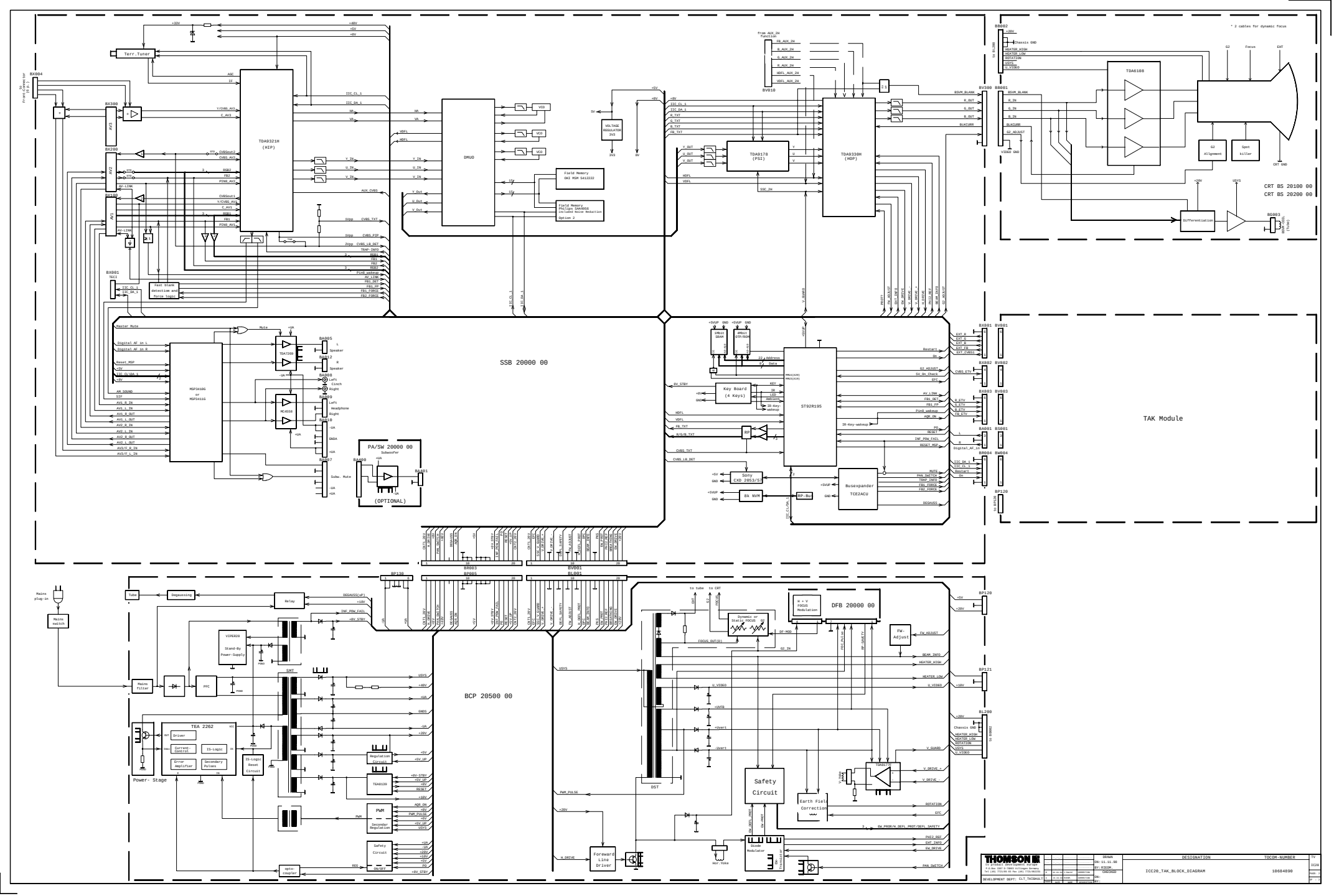

Terr.Tuner
TDA9321H (HIP)
DMUO
Field Memory OKI MSM 5412222
Field Memory Philips SAA4956 included Noise Reduction Option 2
VOLTAGE REGULATOR 2V3
TDA9178 (PSI)
TDA9330H (HOP)
TDA6108
G2 Alignment
Spot killer
Differentiation
CRT BS 20100 00
CRT BS 20200 00
SSB 20000 00
MSP3410G or MSP3411G
TDA7269
MC4558
PA/SW 20000 00
Subwoofer
(OPTIONAL)
Key Board (4 Keys)
ST92R195
Busexpander TCE2ACU
Sony CXD 2053/57
8k NVM
TAK Module
BCP 20500 00
Mains plug-in
Mains switch
Tube
Degaussing
Relay
VIPER20 Stand-By Power-Supply
Mains filter
PFC
TEA 2262
Driver
Current-Control
IS-Logic
Error Amplifier
Secondary Pulses
IS-Logic Reset Circuit
Power- Stage
Regulation Circuit
TEA8139
PWM
Secondary Regulation
Safety Circuit
opto-coupler
DFB 20000 00
Dynamic or Static FOCUS
FW-Adjust
Safety Circuit
Earth Field Correction
Diode Modulator
Forward Line Driver
DST
Hor.Yoke
THOMSON
DEVELOPMENT DEPT: CLT_THIBAULT
DRAWN
DESIGNATION
TOCOM-NUMBER
ICC20_TAK_BLOCK_DIAGRAM
10684890

AV INTERFACE SCHEMATIC DIAGRAM - SCHEMA DE LA PLATINE INTERFACE AV - SCHALTBILD INTERFACE AV - SCHEMA DEI CIRCUITI INTERFACE AV - ESQUEMA DE LOS CIRCUITOS INTERFACE AV

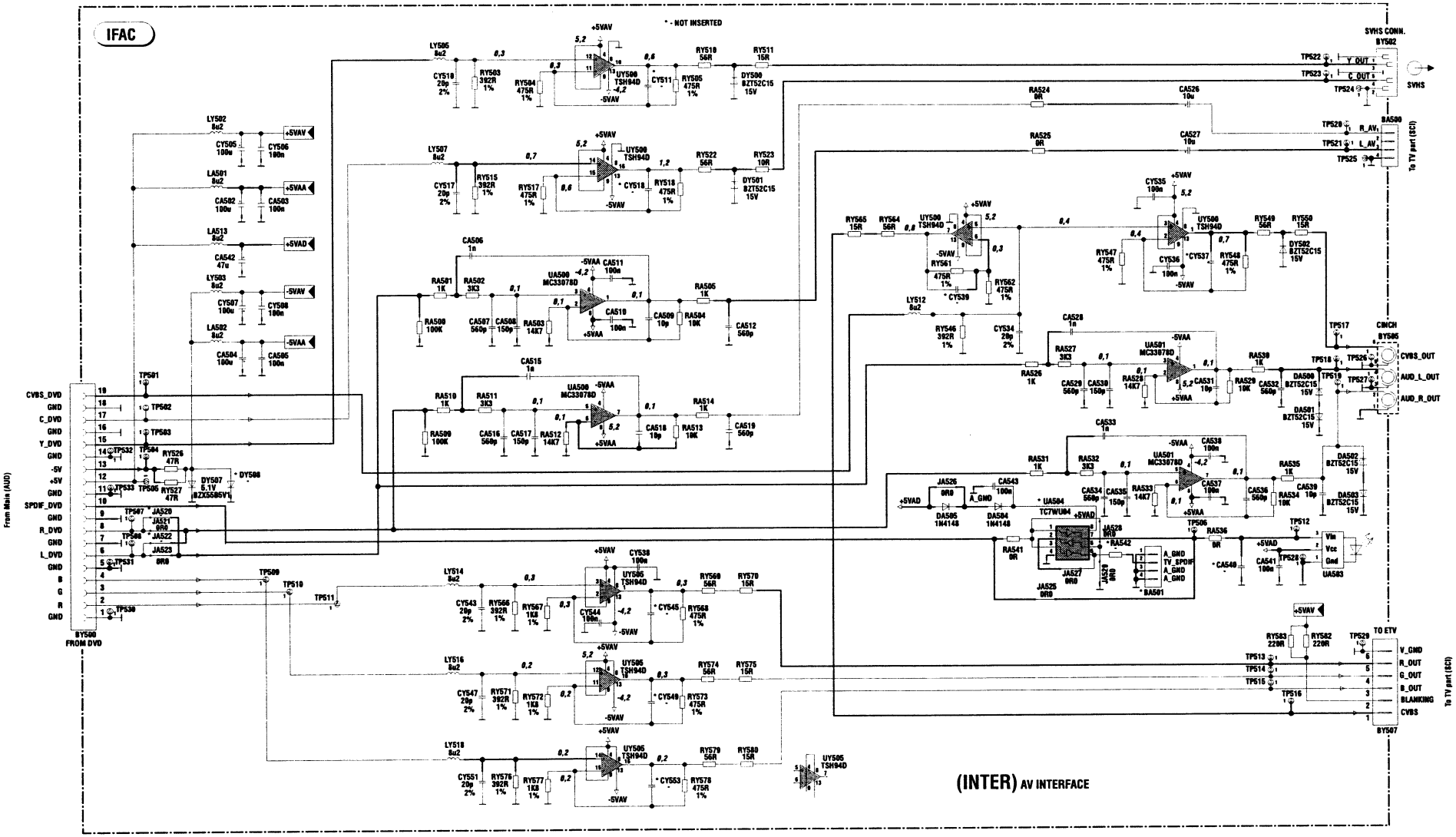

SECONDARY SAFETY VOLTAGES MEASUREMENTS

ON MODE

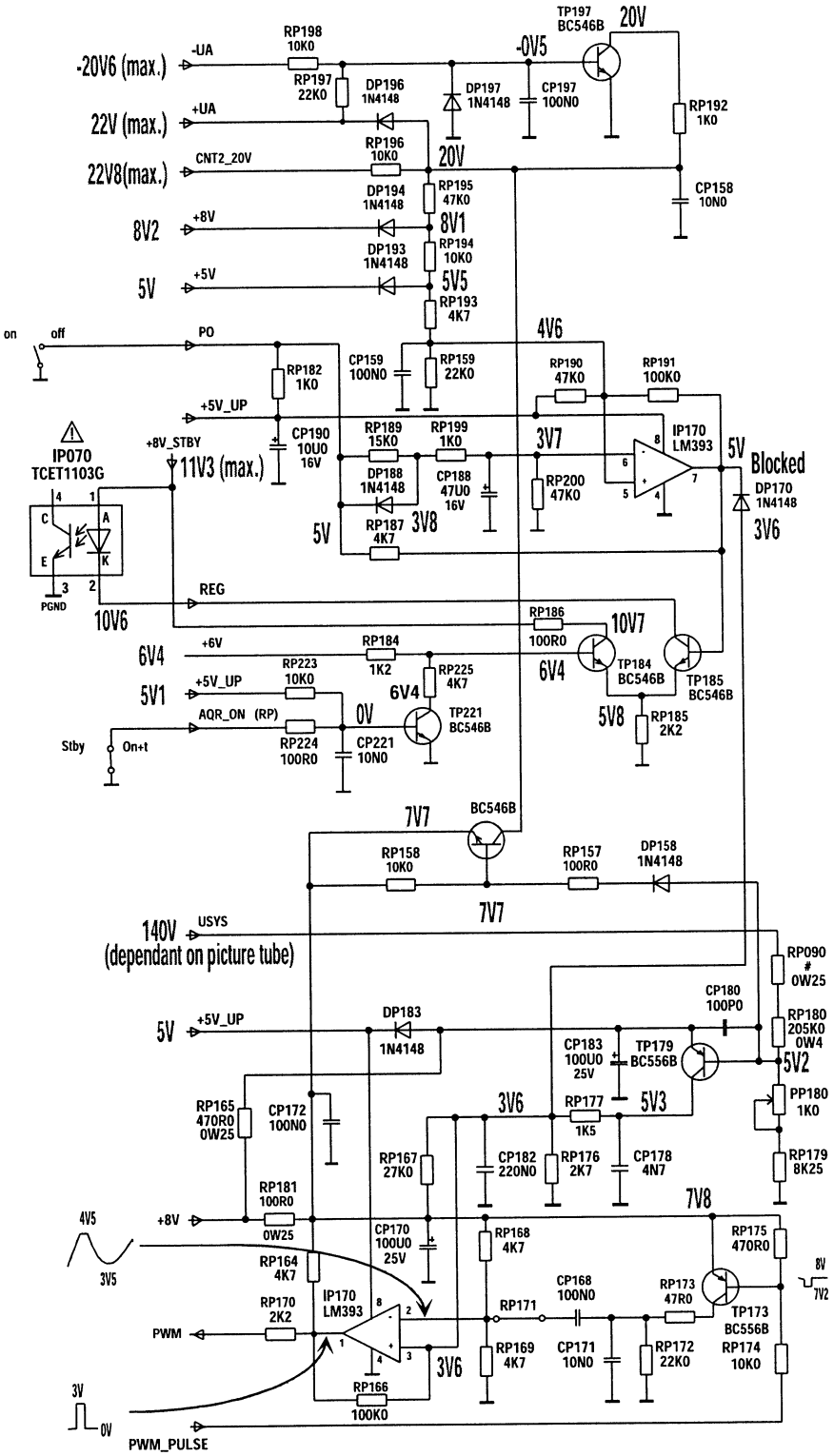

SECONDARY SAFETY VOLTAGES MEASUREMENTS

STANDBY MODE

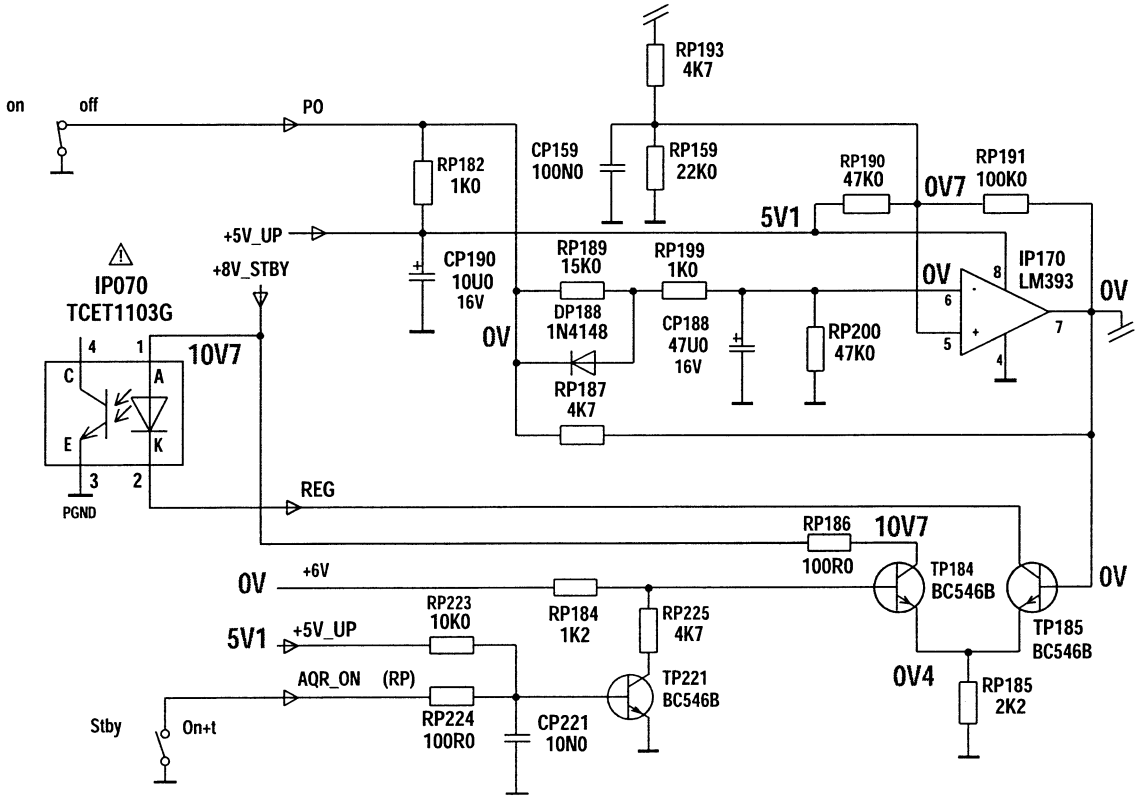

BLOCK DIAGRAM - SCHEMA SYNOPTIQUE - BLOCKSCHALTBILD - SCHEMA A BLOCCHI - ESQUEMA DE BLOQUES

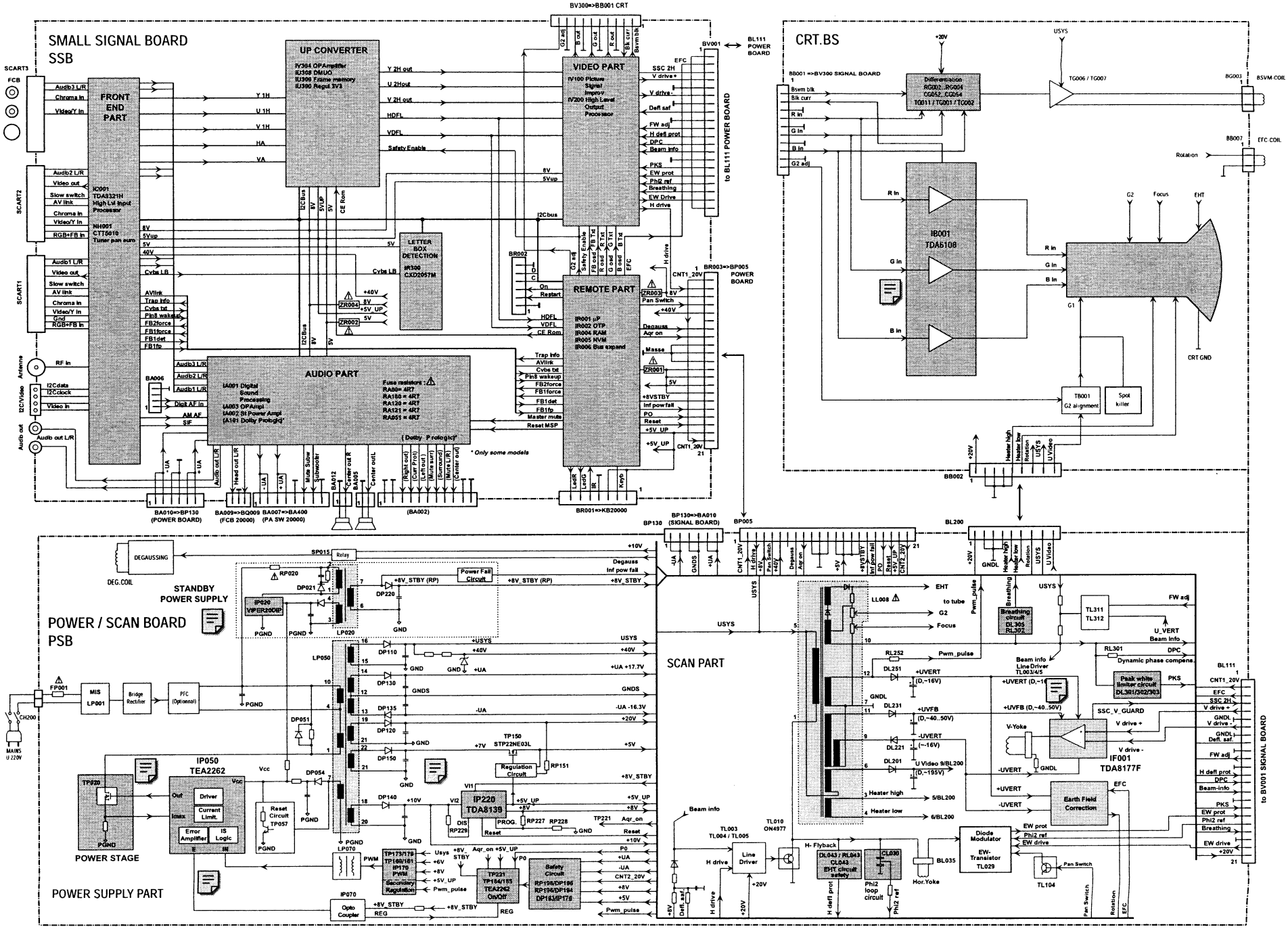

ICC20
First issue 05 / 00